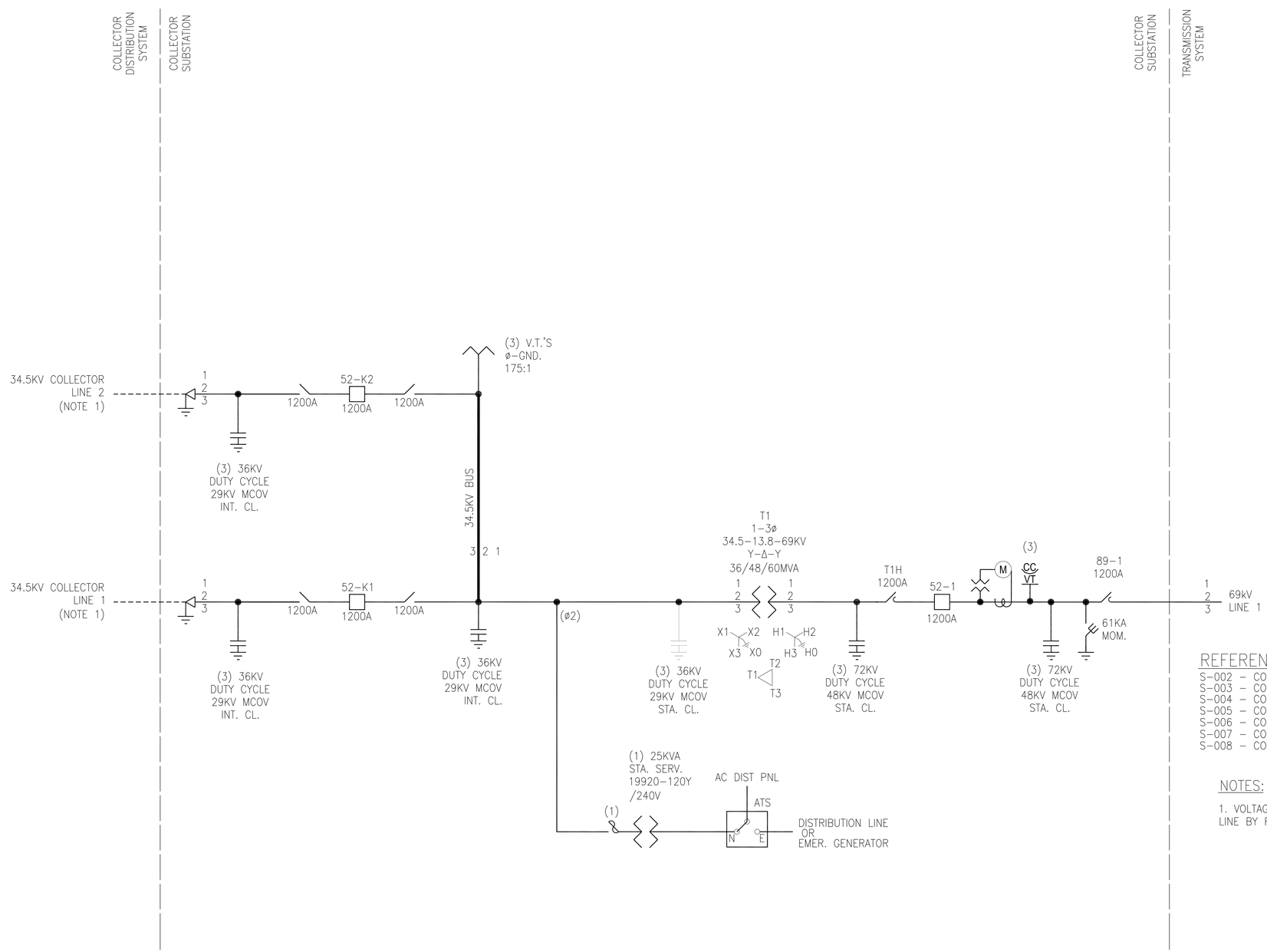

LEGEND OF SYMBOLS:

POWER TRANSFORMER (3Ø)	STATION SERVICE TRANSFORMER
SURGE ARRESTER	FUSED DISCONNECT (HOOKSTICK)
3Ø GROUND SWITCH	VOLTAGE TRANSFORMER (WOUND)
FAULT INT. DEVICE (CKT. BKR.)	SUBSTATION FENCE LINE DEMARCATION
3Ø GROUP OPER. AIRBREAK W/ ARCING HORNS	DISCONNECT SWITCH, GROUP OPERERATED
H.V. TERM. TO SOLID DI-ELECTRIC U.G. CABLE	
CC VT COUPLING CAPACITOR VOLTAGE TRANSFORMER	
M REVENUE METERING	

REFERENCE DRAWINGS:

S-002 – COLLECTOR SUBSTATION GENERAL ARRANGEMENT PLAN
S-003 – COLLECTOR SUBSTATION ELEVATIONS & SECTIONS A-A, B-B
S-004 – COLLECTOR SUBSTATION SECTIONS C-C, D-D
S-005 – COLLECTOR SUBSTATION YARD LIGHTING PLAN
S-006 – COLLECTOR SUBSTATION FENCE & GROUNDING PLAN
S-007 – COLLECTOR SUBSTATION FENCE & GROUNDING DETAILS
S-008 – COLLECTOR SUBSTATION CONTROL HOUSE ELECTRICAL LAYOUT PLAN

NOTES:

1. VOLTAGE WILL BE REGULATED AT EACH COLLECTOR LINE BY FEEDER NETWORK INVERTERS.

PRELIMINARY
NOT FOR CONSTRUCTION

TRC
249 Western Avenue
Augusta, ME 04330

PROJECT NO: 327851

REV	DESCRIPTION	DATE	DES	CHK	APP
A	ISSUED FOR CLIENT REVIEW	06/20/19	AAD	DG	AKD

AAD/TRC DESIGNED
AAD/TRC DRAWN
DG/TRC CHECKED
AKD/TRC APPROVED
REVIEW 1
REVIEW 2

PRELIMINARY
COLLECTOR SUBSTATION POWER ONE-LINE DIAGRAM
EAST POINT ENERGY CENTER
EAST POINT ENERGY CENTER, LLC
SHARON SCHOHARIE CO., NY

06/20/19 DATE
NONE SCALE

TRC

S-001

REV. A

ADJUST DIRECTION OF NORTH ARROW AS NEEDED

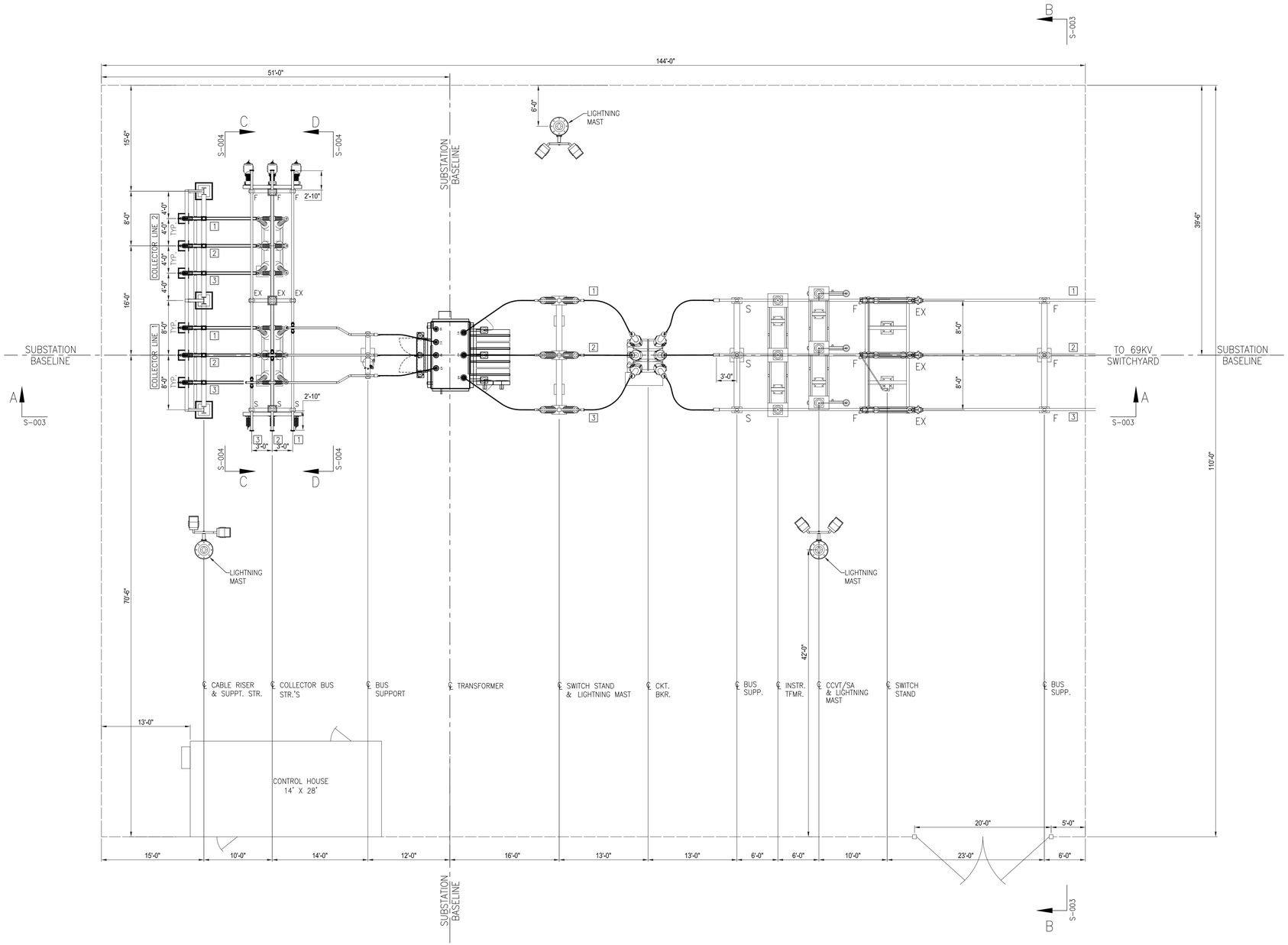

PLAN VIEW

NOTES:

1. BUS SUPPORTS PROVIDED AND INSTALLED AS SHOWN FOR THE FOLLOWING TYPES:
   F–FIXED BUS SUPPORT
   S–SLIP BUS SUPPORT
   EX–EXPANSION BUS SUPPORT
2. CLEARANCES FOR ALL BUS & CONDUCTOR TO BE PER VALUES PUBLISHED IN ANSI C37.32 TABLE 5:
   69KV–PHASE TO PHASE 7'–0" (CENTERLINE–CENTERLINE)
   –PHASE TO GROUND 2'–1" (METAL TO METAL)
   34.5KV–PHASE TO PHASE 3'–0" (CENTERLINE–CENTERLINE)
   –PHASE TO GROUND 1'–3" (METAL TO METAL)
3. WIRE CONDUCTOR MINIMUM BEND RADIUS TO BE INSTALLED NO LESS THAN:
   1272KCM–20 INCHES
   336KCM–10 INCHES
   4/0 COPPER–8 INCHES
   2/0 COPPER–6 INCHES
   1/0 AAAC–5.5 INCHES
   #2 COPPER–4 INCHES

REFERENCE DRAWINGS:

S–001 – COLLECTOR SUBSTATION POWER ONE LINE DIAGRAM
S–003 – COLLECTOR SUBSTATION ELEVATIONS & SECTIONS A–A, B–B
S–004 – COLLECTOR SUBSTATION SECTIONS C–C, D–D
S–005 – COLLECTOR SUBSTATION YARD LIGHTING PLAN
S–006 – COLLECTOR SUBSTATION FENCE & GROUNDING PLAN
S–007 – COLLECTOR SUBSTATION FENCE & GROUNDING DETAILS
S–008 – COLLECTOR SUBSTATION CONTROL HOUSE ELECTRICAL LAYOUT PLAN

0 5 10 15 20 30
SCALE (FEET)
⅛" = 1'–0"

PRELIMINARY
NOT FOR CONSTRUCTION

TRC 249 Western Avenue Augusta, ME 04330

PROJECT NO: 327851

REFERENCES	REV	DESCRIPTION	DATE	DES	CHK	APP
	A	ISSUED FOR CLIENT REVIEW	06/20/19	AAD	DG	AKD

AAD/TRC DESIGNED
AAD/TRC DRAWN
DG/TRC CHECKED
AKD/TRC APPROVED
REVIEW 1
REVIEW 2
06/20/19 DATE
1/8"=1'-0" SCALE

PRELIMINARY
COLLECTOR SUBSTATION GENERAL ARRANGEMENT PLAN
EAST POINT ENERGY CENTER
EAST POINT ENERGY CENTER, LLC
SHARON SCHOHARIE CO., NY

TRC

S-002

REV. A

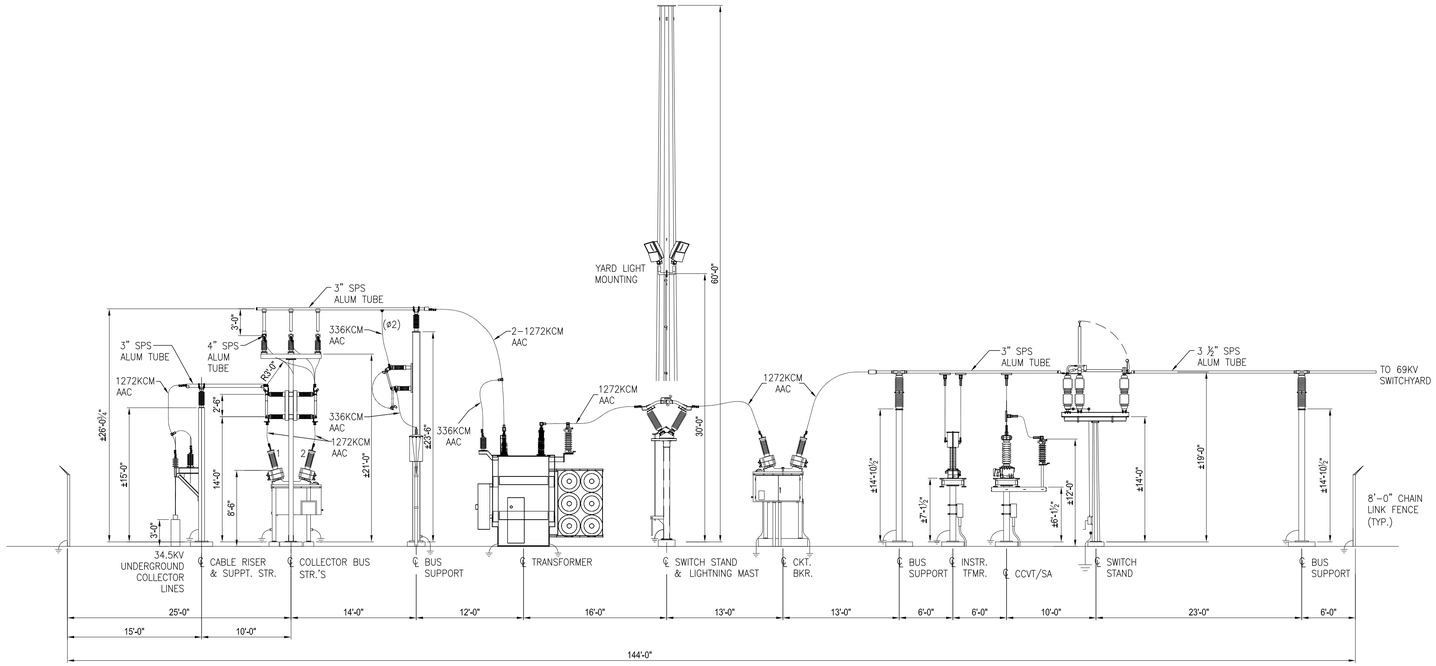

ELEVATION A–A

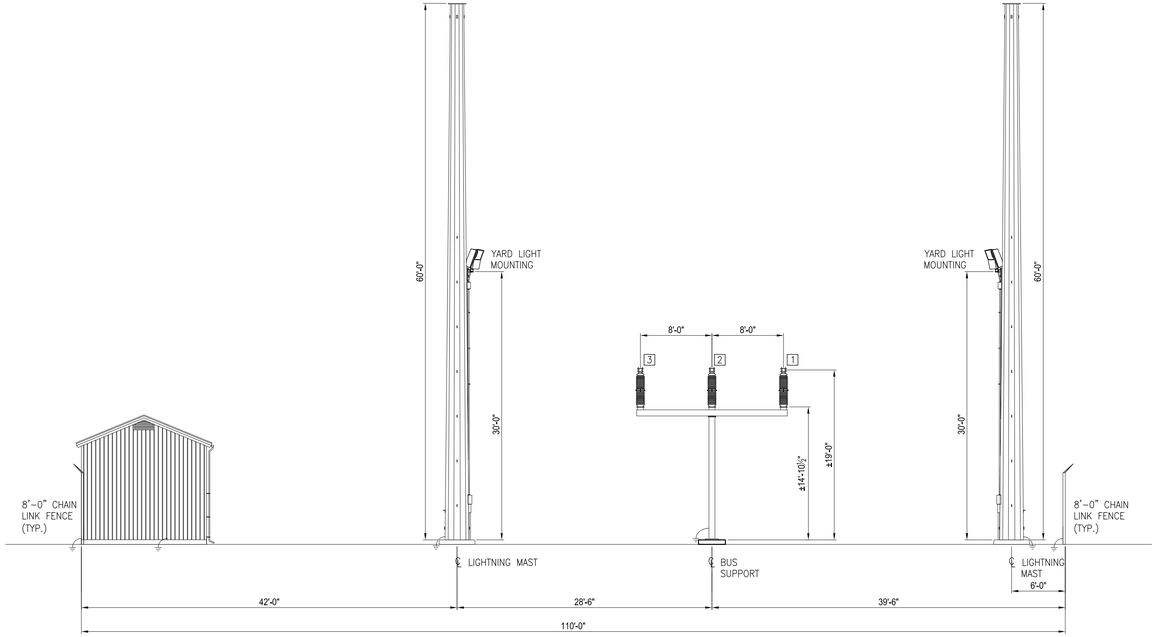

SECTION B–B

NOTES:

1. BUS SUPPORTS PROVIDED AND INSTALLED AS SHOWN FOR THE FOLLOWING TYPES:
   F–FIXED BUS SUPPORT
   S–SLIP BUS SUPPORT
   EX–EXPANSION BUS SUPPORT
2. CLEARANCES FOR ALL BUS & CONDUCTOR TO BE PER VALUES PUBLISHED IN ANSI C37.32 TABLE 5:
   69KV–PHASE TO PHASE 7'–0" (CENTERLINE–CENTERLINE)
   –PHASE TO GROUND 2'–1" (METAL TO METAL)
   34.5KV–PHASE TO PHASE 3'–0" (CENTERLINE–CENTERLINE)
   –PHASE TO GROUND 1'–3" (METAL TO METAL)
3. WIRE CONDUCTOR MINIMUM BEND RADIUS TO BE INSTALLED NO LESS THAN:
   1272KCM–20 INCHES
   336KCM–10 INCHES
   4/0 COPPER–8 INCHES
   2/0 COPPER–6 INCHES
   1/0 AAC–5.5 INCHES
   #2 COPPER–4 INCHES

REFERENCE DRAWINGS:

S–001 – COLLECTOR SUBSTATION POWER ONE LINE DIAGRAM
S–002 – COLLECTOR SUBSTATION GENERAL ARRANGEMENT PLAN
S–004 – COLLECTOR SUBSTATION SECTIONS C–C, D–D
S–005 – COLLECTOR SUBSTATION YARD LIGHTING PLAN
S–006 – COLLECTOR SUBSTATION FENCE & GROUNDING PLAN
S–007 – COLLECTOR SUBSTATION FENCE & GROUNDING DETAILS
S–008 – COLLECTOR SUBSTATION CONTROL HOUSE ELECTRICAL LAYOUT PLAN

0 5 10 15 20 30
SCALE (FEET)
⅛" = 1'–0"

PRELIMINARY
NOT FOR CONSTRUCTION

TRC 249 Western Avenue
Augusta, ME 04330

PROJECT NO: 327851

REFERENCES	REV	DESCRIPTION	DATE	DES	CHK	APP
	A	ISSUED FOR CLIENT REVIEW	06/20/19	AAD	DG	AKD

AAD/TRC DESIGNED
AAD/TRC DRAWN
DG/TRC CHECKED
AKD/TRC APPROVED
REVIEW 1
REVIEW 2

PRELIMINARY
COLLECTOR SUBSTATION ELEVATIONS & SECTIONS A-A, B-B
EAST POINT ENERGY CENTER
EAST POINT ENERGY CENTER, LLC
SHARON SCHOHARIE CO., NY

06/20/19 DATE
1/8"=1'-0" SCALE

TRC

S-003

REV. A

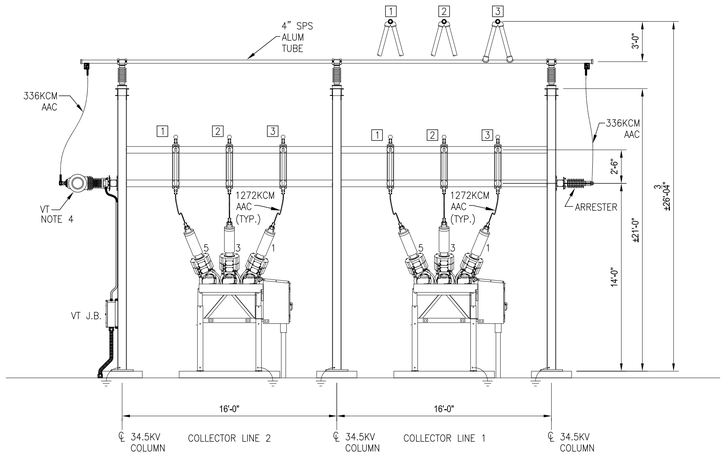

SECTION C–C
LINE–SIDE

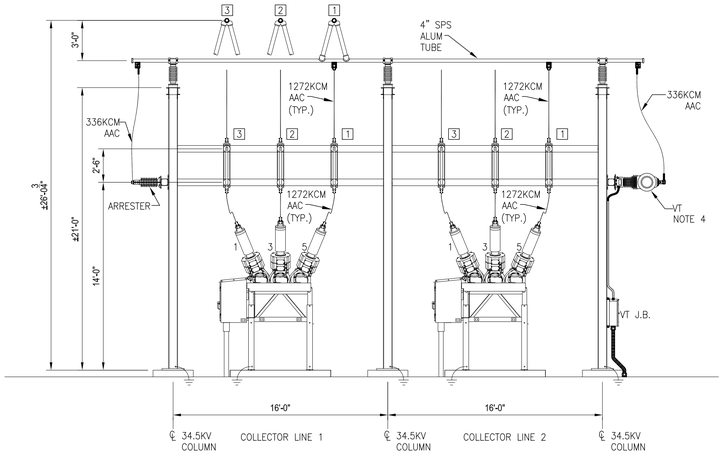

SECTION D–D
BUS–SIDE

NOTES:

1. BUS SUPPORTS PROVIDED AND INSTALLED AS SHOWN FOR THE FOLLOWING TYPES:
   F–FIXED BUS SUPPORT
   S–SLIP BUS SUPPORT
   EX–EXPANSION BUS SUPPORT
2. CLEARANCES FOR ALL BUS & CONDUCTOR TO BE PER VALUES PUBLISHED IN ANSI C37.32 TABLE 5:
   115KV–PHASE TO PHASE 7'–0" (CENTERLINE–CENTERLINE)
   –PHASE TO GROUND 2'–1" (METAL TO METAL)
   34.5KV–PHASE TO PHASE 3'–0" (CENTERLINE–CENTERLINE)
   –PHASE TO GROUND 1'–3" (METAL TO METAL)
3. WIRE CONDUCTOR MINIMUM BEND RADIUS TO BE INSTALLED NO LESS THAN:
   1272KCM–20 INCHES
   336KCM–10 INCHES
   4/0 COPPER–8 INCHES
   2/0 COPPER–6 INCHES
   1/0 AAAC–5.5 INCHES
   #2 COPPER–4 INCHES
4. BUS TIE VOLTAGE TFMRS. TO BE INSTALLED H1–PHASE H2–GROUND.

REFERENCE DRAWINGS:

S–001 – COLLECTOR SUBSTATION POWER ONE LINE DIAGRAM
S–002 – COLLECTOR SUBSTATION GENERAL ARRANGEMENT PLAN
S–003 – COLLECTOR SUBSTATION ELEVATIONS & SECTIONS A–A, B–B
S–005 – COLLECTOR SUBSTATION YARD LIGHTING PLAN
S–006 – COLLECTOR SUBSTATION FENCE & GROUNDING PLAN
S–007 – COLLECTOR SUBSTATION FENCE & GROUNDING DETAILS
S–008 – COLLECTOR SUBSTATION CONTROL HOUSE ELECTRICAL LAYOUT PLAN

0 5 10 15 20
SCALE (FEET)
$\frac{3}{16}$" = 1'–0"

PRELIMINARY
NOT FOR CONSTRUCTION

TRC 249 Western Avenue
Augusta, ME 04330

PROJECT NO: 327851

REFERENCES	REV	DESCRIPTION	DATE	DES	CHK	APP
	A	ISSUED FOR CLIENT REVIEW	06/20/19	AAD	DG	AKD

AAD/TRC DESIGNED
AAD/TRC DRAWN
DG/TRC CHECKED
AKD/TRC APPROVED
REVIEW 1
REVIEW 2

PRELIMINARY
COLLECTOR SUBSTATION SECTIONS C-C, D-D
EAST POINT ENERGY CENTER
EAST POINT ENERGY CENTER, LLC
SHARON SCHOHARIE CO., NY

06/20/19 DATE
3/16"=1'-0" SCALE

TRC

S-004

REV. A

ADJUST DIRECTION OF NORTH ARROW AS NEEDED

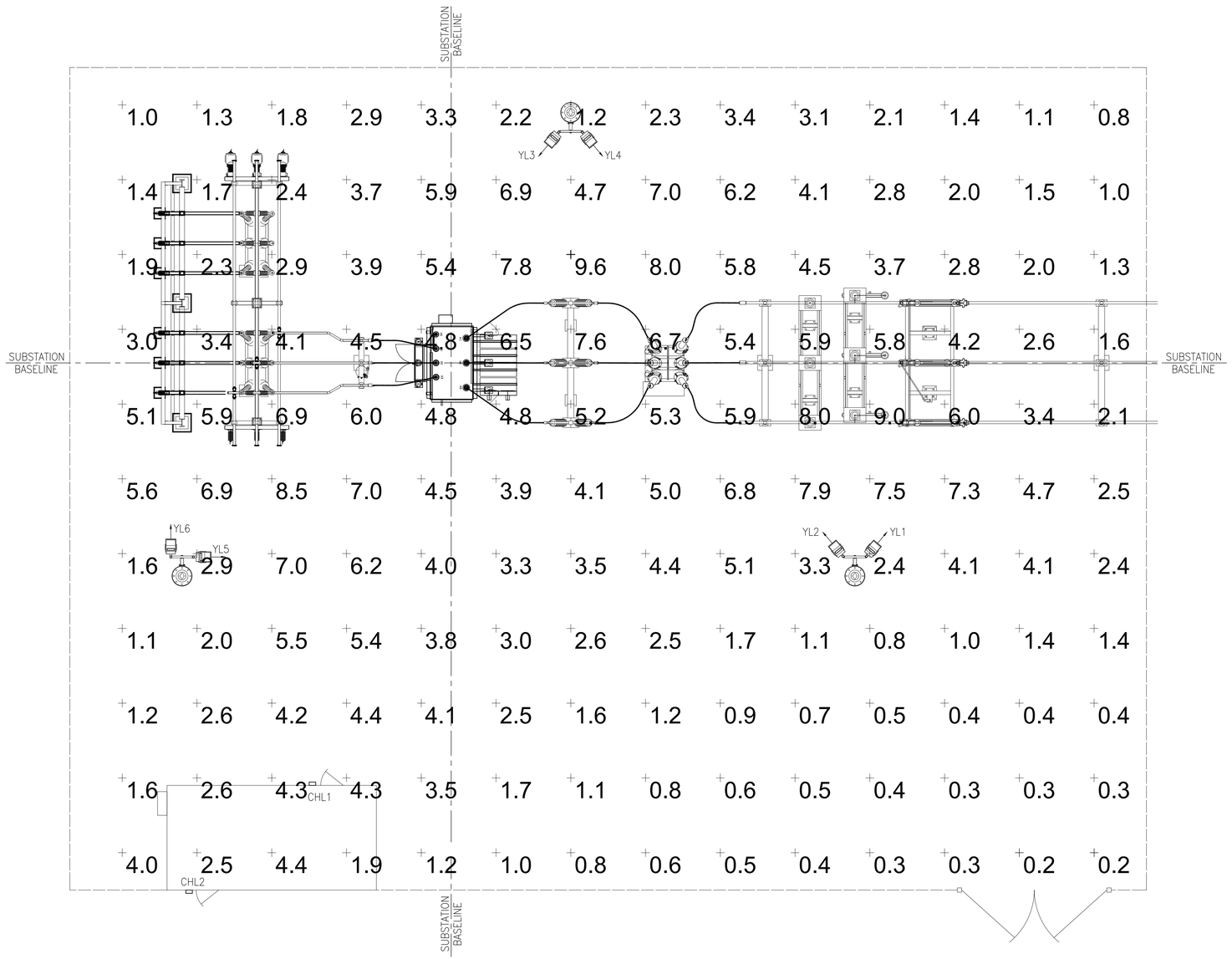

PLAN VIEW

YARD LIGHTING SCHEDULE						
LIGHT NO.	TYPE	WATTAGE	MOUNTING HEIGHT	ORIENTATION	TILT (DEGREES)	PANEL/ CCT. #
YL1	TFLU 250S	250W	30FT	40	60	---
YL2	TFLU 250S	250W	30FT	320	60	---
YL3	TFLU 250S	250W	30FT	220	60	---
YL4	TFLU 250S	250W	30FT	140	60	---
YL5	TFLU 250S	250W	30FT	90	60	---
YL6	TFLU 250S	250W	30FT	0	60	---
CHL1	TWA 70S	70W	10FT	---	---	---
CHL2	TWA 70S	70W	10FT	---	---	---

STATISTICS – OVERALL SITE						
DESCRIPTION	SYMBOL	AVERAGE	MAXIMUM	MINIMUM	MAX/MIN	AVERAGE/MIN
SITE	+	3.4 fc	9.6 fc	0.2 fc	48.0:1	17.0:1

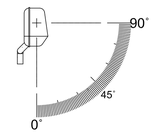

YARD LIGHT TILT

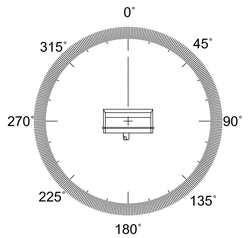

YARD LIGHT ORIENTATION ANGLE

LEGEND

"A" LIGHT FIXTURE, LITHONIA CONTOUR TFLU-250S (WOOD POLE MOUNTED)

"C" LIGHT FIXTURE, LITHONIA CONTOUR TWA-70S (BUILDING MOUNTED)

NOTES:

1. YARD FLOOD FIXTURES YL1, YL2, YL3, YL4, YL5 & YL6 ARE MOUNTED 30'-0" ABOVE FINISHED GRADE.
2. EXTERIOR CONTROL HOUSE FIXTURES CHL1 & CHL2 ARE MOUNTED 10'-0" ABOVE FINISHED GRADE.
3. INCIDENT LIGHT LEVEL POINTS ARE SPACED AT 10' X 10'.
4. THE AVERAGE ILLUMINATION IN THE SUBSTATION YARD IS 3.4 FOOTCANDLES.
5. YARD LIGHTING CONTROL EQUIPMENT IS DEFINED ON DWG. 327851-XX.
6. LIGHTING CALCULATIONS WERE PERFORMED USING VISUAL 2016, VERSION 2.08.
7. OVERALL SITE LAYOUT INCLUDES PROPOSED PERIMETER AND PROPOSED WORK LIGHTING.
8. PERIMETER LIGHTING CONTROL OPTIONS ARE ON/OFF/AUTO.
9. WORK LIGHTING CONTROL OPTIONS ARE ON/OFF.

REFERENCE DRAWINGS:

S-001 – COLLECTOR SUBSTATION POWER ONE LINE DIAGRAM
S-002 – COLLECTOR SUBSTATION GENERAL ARRANGEMENT PLAN
S-003 – COLLECTOR SUBSTATION ELEVATIONS & SECTIONS A-A, B-B
S-004 – COLLECTOR SUBSTATION SECTIONS C-C, D-D
S-006 – COLLECTOR SUBSTATION FENCE & GROUNDING PLAN
S-007 – COLLECTOR SUBSTATION FENCE & GROUNDING DETAILS
S-008 – COLLECTOR SUBSTATION CONTROL HOUSE ELECTRICAL LAYOUT PLAN

0 5 10 15 20 30

SCALE (FEET)
1/8" = 1'-0"

PRELIMINARY
NOT FOR CONSTRUCTION

TRC 249 Western Avenue Augusta, ME 04330

PROJECT NO: 327851

REFERENCES	REV	DESCRIPTION	DATE	DES	CHK	APP
	A	ISSUED FOR CLIENT REVIEW	06/20/19	AAD	DG	AKD

AAD/TRC DESIGNED
AAD/TRC DRAWN
DG/TRC CHECKED
AKD/TRC APPROVED
REVIEW 1
REVIEW 2

06/20/19 DATE
1/8"=1'-0" SCALE

PRELIMINARY
COLLECTOR SUBSTATION YARD LIGHTING PLAN
EAST POINT ENERGY CENTER
EAST POINT ENERGY CENTER, LLC
SHARON SCHOHARIE CO., NY

TRC

S-005

REV. A

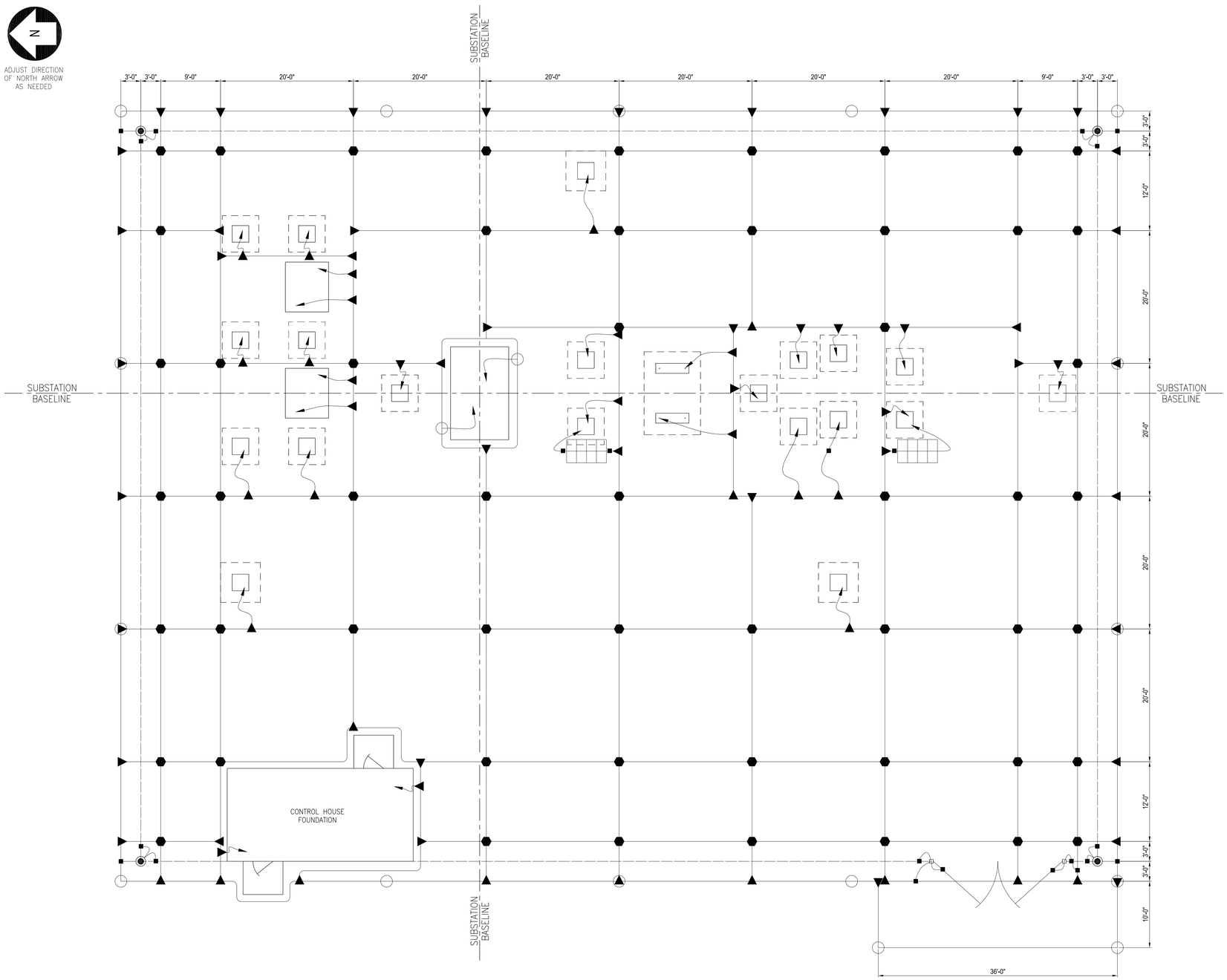

PLAN VIEW

LEGEND OF SYMBOLS:

SYMBOL	DESCRIPTION	MATERIAL MARK
	8' PERIMETER FENCE	G01
	GROUND CLAMP, GALV. PIPE TO CABLE (FOR LINE POST)	G04
	GROUND CLAMP, GALV. PIPE TO CABLE (FOR GATE POST)	G05
	GROUND CLAMP, GALV. PIPE TO CABLE (FOR INTERMEDIATE POST)	G06
	SPLIT BOLT CONNECTOR	G07
	2/0 COPPER GROUND STRAND SOFT DRAWN	G08
	4/0 COPPER GROUND WIRE 19 STRAND SOFT DRAWN	G09
	4/0 COPPER WIRE PIGTAIL	G09
	GROUND CLAMP, GALV. PIPE TO CABLE	G10
	GROUND CLAMP, GALV. PIPE TO CABLE (FOR GATE FRAME)	G11
	CONNECTOR, GROUND, #2/0 TO GALV. PIPE	G12
	4/0 TO 4/0 COPPER WIRE CROSS CONNECTION	G13
	4/0 TO 4/0 COPPER WIRE TEE CONNECTION	G13
	4/0 TO 1/0 COPPER WIRE TEE CONNECTION	G15
	BRAID,1⅝" X 18", TINNED COPPER, FERRULE ENDS,	G16
	4' X 6' COPPER WIRE SWITCH MAT	G17
	GROUND ROD LOCATION	G20
	FENCE POST	TBD

NOTES:

1. PERIMITER GROUND CONDUCTOR TO BE A CONTINUOUS LOOP.
2. THE GROUND GRID SHALL BE 4/0 COPPERWELD AND BURIED AT A MINIMUM DEPTH OF 2'-0" BELOW GRADE.
3. TAPS FROM MAIN GRID SHALL BE AT LOCATIONS INDICATED TO GROUND STRUCTURE COLUMNS, EQUIPMENT, ETC.
4. PROVIDE TAPS FOR FENCE GROUND AT EACH GATE POST, CORNER POST AND FOR EVERY THIRD OR FOURTH LINE POST.
5. ALL TAPS SHALL EXTEND AT LEAST 6'-0" ABOVE FINISHED GRADE (AFG), UNLESS OTHERWISE NOTED.

REFERENCE DRAWINGS:

S-001 – COLLECTOR SUBSTATION POWER ONE LINE DIAGRAM
S-002 – COLLECTOR SUBSTATION GENERAL ARRANGEMENT PLAN
S-003 – COLLECTOR SUBSTATION ELEVATIONS & SECTIONS A-A, B-B
S-004 – COLLECTOR SUBSTATION SECTIONS C-C, D-D
S-005 – COLLECTOR SUBSTATION YARD LIGHTING PLAN
S-007 – COLLECTOR SUBSTATION FENCE & GROUNDING DETAILS
S-008 – COLLECTOR SUBSTATION CONTROL HOUSE ELECTRICAL LAYOUT PLAN

0 5 10 15 20 30
SCALE (FEET)
⅛" = 1'-0"

PRELIMINARY
NOT FOR CONSTRUCTION

TRC 249 Western Avenue Augusta, ME 04330

PROJECT NO: 327851

REFERENCES	REV	DESCRIPTION	DATE	DES	CHK	APP
	A	ISSUED FOR CLIENT REVIEW	06/20/19	AAD	DG	AKD

AAD/TRC DESIGNED
AAD/TRC DRAWN
DG/TRC CHECKED
AKD/TRC APPROVED
REVIEW 1
REVIEW 2

PRELIMINARY
COLLECTOR SUBSTATION FENCE & GROUNDING PLAN
EAST POINT ENERGY CENTER
EAST POINT ENERGY CENTER, LLC
SHARON SCHOHARIE CO., NY

06/20/19 DATE
1/8"=1'-0" SCALE

TRC

S-006

REV. A

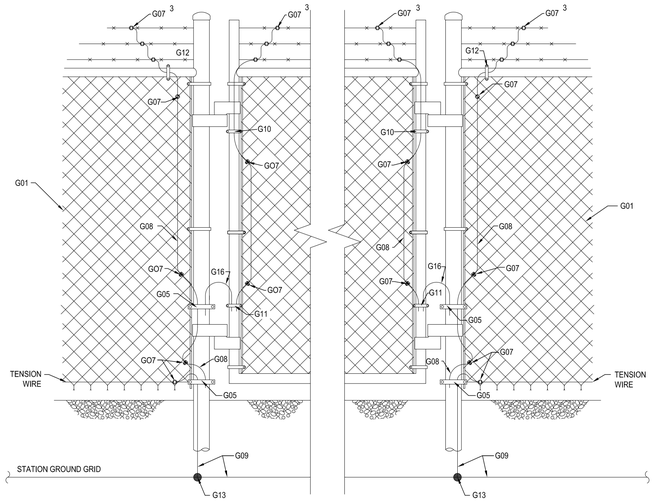

PER GATE QUANTITIES

G05 Qty 4	G10 Qty 2
G07 Qty 24	G11 Qty 2
G08 Qty 32'	G12 Qty 2
G09 Qty 20'	G13 Qty 2
	G16 Qty 4'

DETAIL "A"

24'-0" MAIN GATE GROUNDING

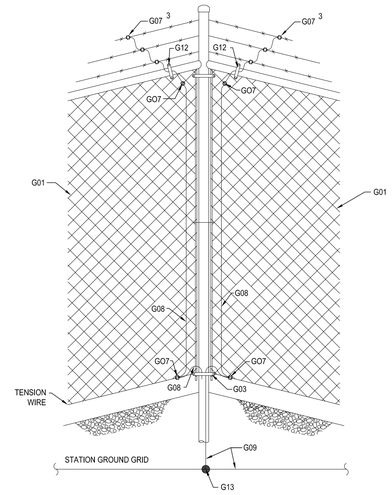

PER CORNER POST QUANTITIES

G03 Qty 1	G09 Qty 10'
G07 Qty 10	G12 Qty 2
G08 Qty 20'	G13 Qty 1

DETAIL "B"

CORNER POST GROUNDING

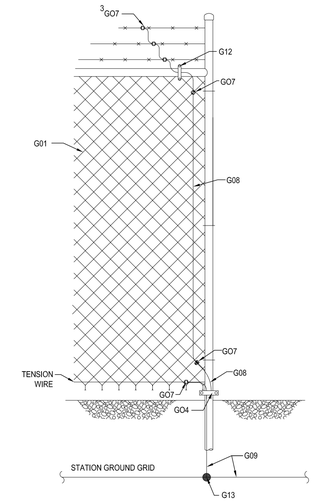

PER END POST QUANTITIES

G04 Qty 1	G09 Qty 10'
G07 Qty 6	G12 Qty 1
G08 Qty 8'	G13 Qty 1

DETAIL "C"

END POST GROUNDING

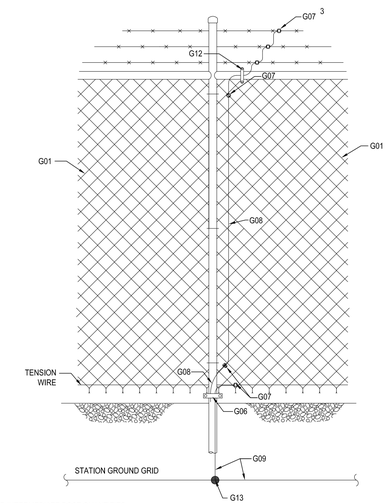

PER INTERMEDIATE POST QUANTITIES

G06 Qty 1	G12 Qty 1
G07 Qty 6	G13 Qty 1
	G08 Qty 8'
	G09 Qty 10'

DETAIL "D"

INTERMEDIATE POST GROUNDING

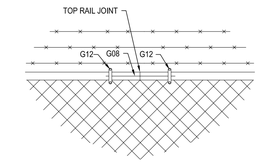

DETAIL "E"

TOP RAIL JOINT GROUNDING

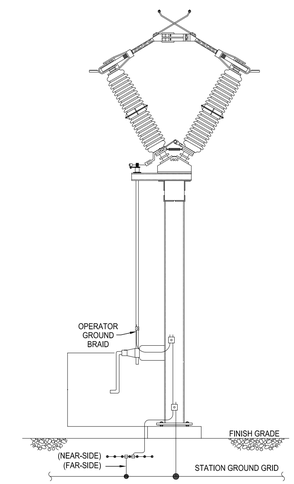

DETAIL "K"

TYPICAL VEE SWITCH GROUNDING

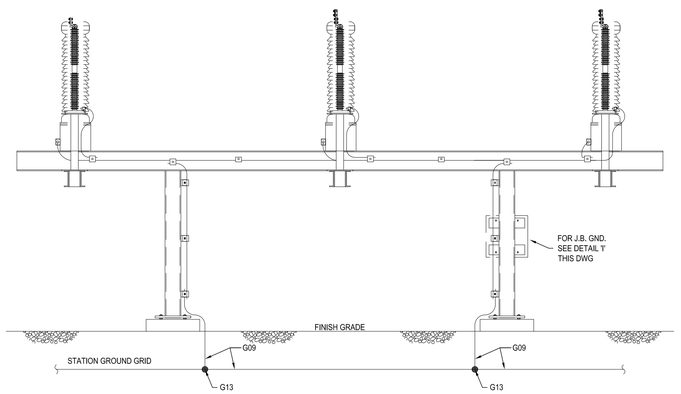

DETAIL "H"

TYPICAL 115KV CCVT/LA GROUNDING

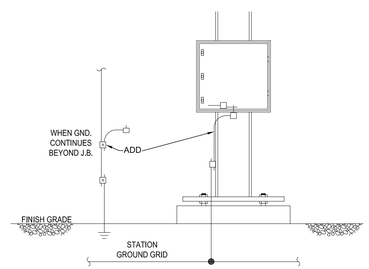

DETAIL "I"

TYPICAL JUNCTION BOX GROUNDING

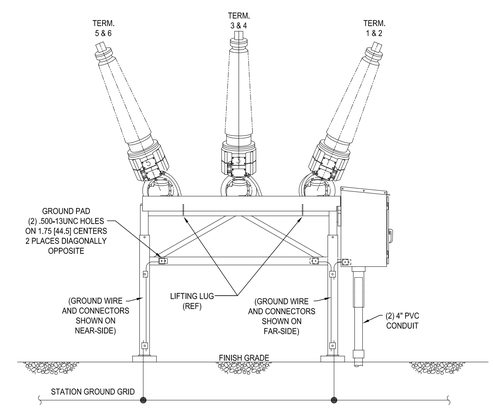

DETAIL "J"

TYPICAL BREAKER & MECH. HOUSING GROUNDING

REFERENCE DRAWINGS:

S-001 – COLLECTOR SUBSTATION POWER ONE LINE DIAGRAM
S-002 – COLLECTOR SUBSTATION GENERAL ARRANGEMENT PLAN
S-003 – COLLECTOR SUBSTATION ELEVATIONS & SECTIONS A-A, B-B
S-004 – COLLECTOR SUBSTATION SECTIONS C-C, D-D
S-005 – COLLECTOR SUBSTATION YARD LIGHTING PLAN
S-006 – COLLECTOR SUBSTATION FENCE & GROUNDING PLAN
S-008 – COLLECTOR SUBSTATION CONTROL HOUSE ELECTRICAL LAYOUT PLAN

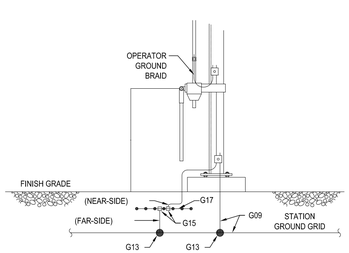

DETAIL "F"

TYPICAL GROUND DETAIL AT WORM GEAR SW. OPER. MECH.

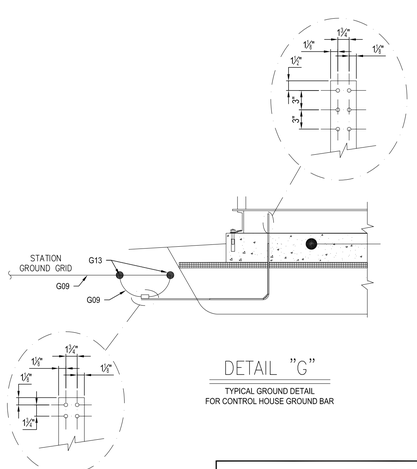

DETAIL "G"

TYPICAL GROUND DETAIL FOR CONTROL HOUSE GROUND BAR

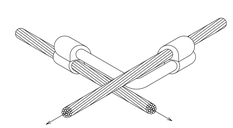

4/0 CABLE TO 4/0 CABLE CROSS OR TEE

BURNDY CAT.#YGL29C29 MARK"G13"
CONDUCTOR RANGE:
COND. "A" - #2 SOL.-250KCM
COND. "B" - #2 STR.-250KCM
COMPRESSION TOOLS:
Y750/Y35/Y39 HYPRESS
Y45 HYPRESS W/ PT6515 ADAPTER
Y46 HYPRESS W/ P-UADP ADAPTER
DIE SET CAT.# U997
ONE (1) CRIMP REQUIRED

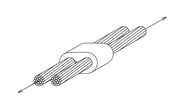

4/0 CABLE TO 1/0 CENTER WIRE GROUND MAT

BURNDY CAT.#YGHC29C29 MARK"G23"
CONDUCTOR RANGE:
RUN - #3/0 STR.-250KCM
TAP - #3/0 STR.-250KCM
COMPRESSION TOOLS:
Y750/Y35/Y39 HYPRESS
DIE SET CAT.# U997
ONE (1) CRIMP REQUIRED

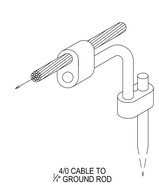

4/0 CABLE TO ½" GROUND ROD

BURNDY CAT.#YGL34C29 MARK"G14"
CONDUCTOR RANGE:
ROD - ½" - ½"
CABLE - #2 STR.-250KCM
COMPRESSION TOOLS:
Y750/Y45/Y46 HYPRESS
Y750 COND."A" DIE SET CAT.# PU998
Y750 COND."B" DIE SET CAT.# U997
Y45 COND. "A" DIE SET CAT.# S998 OR PU998
Y45 COND. "B" DIE SET CAT.# U997
Y46 COND. "A" DIE SET CAT.# P998 OR PU998
Y46 COND. "B" DIE SET CAT.# U997
ONE (1) CRIMP REQUIRED
TWO (2) CRIMP ON GND ROD
PRECRIMP GND ROD USE CAT.#U2CABT

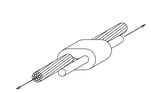

4/0 CABLE TO 1/0 CENTER WIRE GROUND MAT

BURNDY CAT.#YGHC29C26 MARK"G15"
CONDUCTOR RANGE:
RUN - #3/0 STR.-250KCM
TAP - #6 SOL.-2/0 STR.
COMPRESSION TOOLS:
Y750/Y35/Y39 HYPRESS
DIE SET CAT.# U997
ONE (1) CRIMP REQUIRED

PRELIMINARY
NOT FOR CONSTRUCTION

TRC
249 Western Avenue
Augusta, ME 04330

PROJECT NO: 327851

REFERENCES	REV	DESCRIPTION	DATE	DES	CHK	APP
	A	ISSUED FOR CLIENT REVIEW	06/20/19	AAD	DG	AKD

AAD/TRC	DESIGNED
AAD/TRC	DRAWN
DG/TRC	CHECKED
AKD/TRC	APPROVED
	REVIEW 1
	REVIEW 2
06/20/19	DATE
NONE	SCALE

PRELIMINARY
COLLECTOR SUBSTATION FENCE & GROUNDING DETAILS
EAST POINT ENERGY CENTER
EAST POINT ENERGY CENTER, LLC
SHARON SCHOHARIE CO., NY

TRC

S-007

REV. A

ADJUST DIRECTION OF NORTH ARROW AS NEEDED

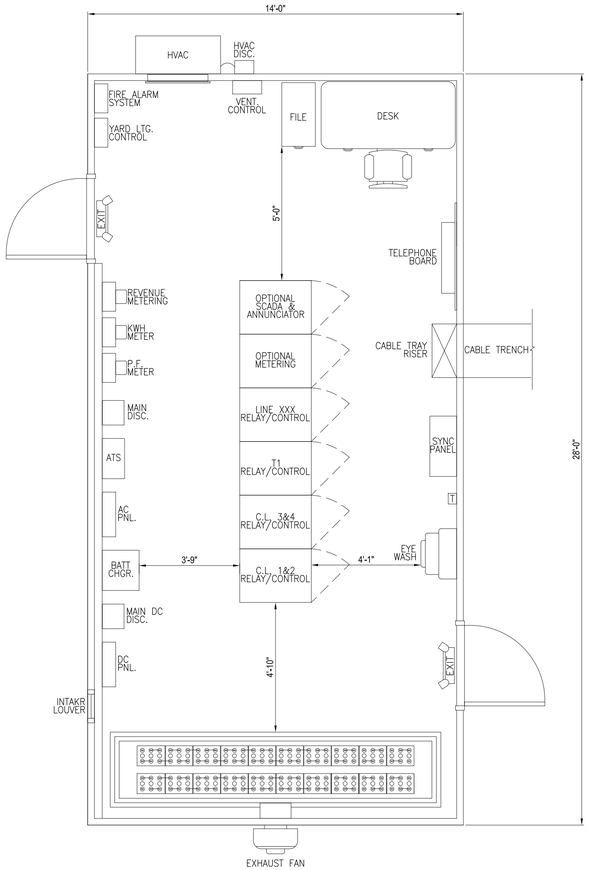

CONTROL ROOM FLOOR PLAN

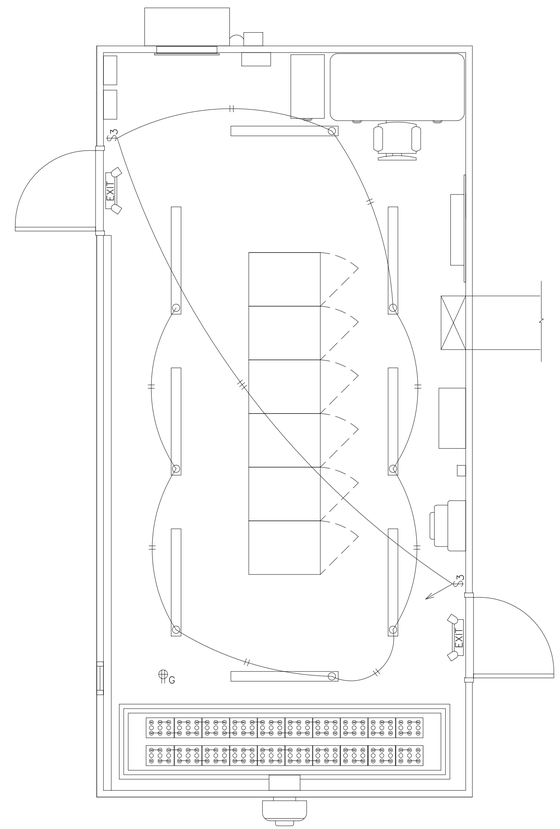

CONTROL ROOM LIGHTING PLAN

REFERENCE DRAWINGS:

S-001 – COLLECTOR SUBSTATION POWER ONE LINE DIAGRAM
S-002 – COLLECTOR SUBSTATION GENERAL ARRANGEMENT PLAN
S-003 – COLLECTOR SUBSTATION ELEVATIONS & SECTIONS A-A, B-B
S-004 – COLLECTOR SUBSTATION SECTIONS C-C, D-D
S-005 – COLLECTOR SUBSTATION YARD LIGHTING PLAN
S-006 – COLLECTOR SUBSTATION FENCE & GROUNDING PLAN
S-007 – COLLECTOR SUBSTATION FENCE & GROUNDING DETAILS

LEGEND:

$ –SINGLE TOGGLE SWITCH
$3 –3 WAY TOGGLE SWITCH
T –HVAC THERMOSTAT
–WIRING HOME RUN, SINGLE POLE
–WIRING HOME RUN, DOUBLE POLE
G –DOUBLE DUPLEX OUTLET, 20A

LIGHTING SCHEDULE:

–FLOURESCENT LIGHT FIXTURE, 2 LAMP 4', 32 WATT, 120V
–OUTDOOR LIGHT FIXTURE, HIGH PRESSURE SODIUM, 70 WATT, 120V
EXIT –EMERGENCY BATTERY LIGHT/EXIT SIGN, 120V

PRELIMINARY
NOT FOR CONSTRUCTION

TRC 249 Western Avenue Augusta, ME 04330

PROJECT NO: 327851

REFERENCES	REV	DESCRIPTION	DATE	DES	CHK	APP
	A	ISSUED FOR CLIENT REVIEW	06/20/19	AAD	DG	AKD

AAD/TRC DESIGNED
AAD/TRC DRAWN
DG/TRC CHECKED
AKD/TRC APPROVED
REVIEW 1
REVIEW 2

PRELIMINARY
COLLECTOR SUBSTATION CONTROL HOUSE ELECTRICAL LAYOUT PLAN
EAST POINT ENERGY CENTER
EAST POINT ENERGY CENTER, LLC
SHARON SCHOHARIE CO., NY

06/20/19 DATE
3/8"=1'-0" SCALE
TRC
S-008
REV. A

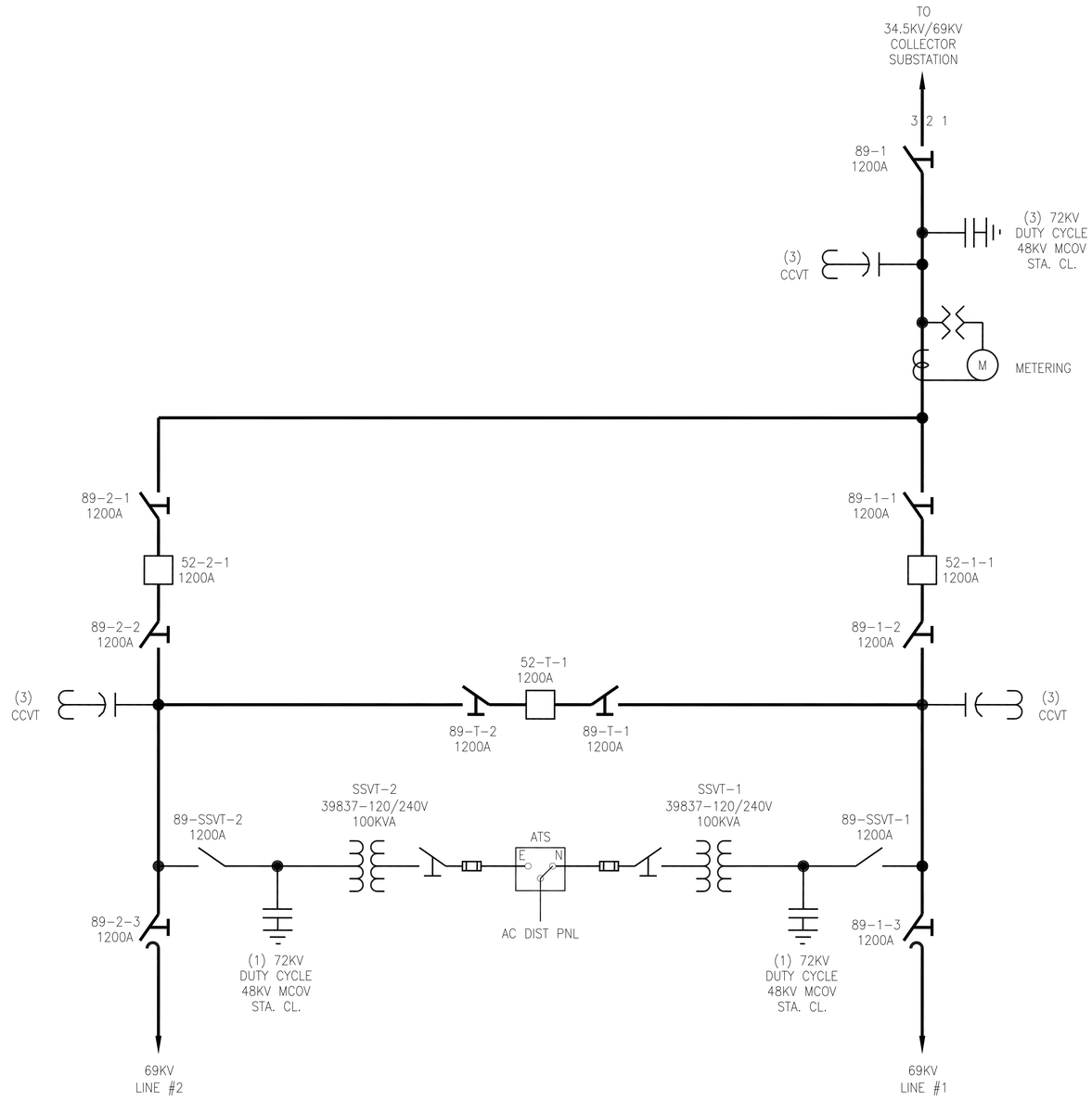

LEGEND OF SYMBOLS:

	POWER CKT. BKR., SF6
	SURGE ARRESTER
	DISCONNECT SWITCH, GROUP OPERERATED
	DISCONNECT SWITCH, GROUP OPERERATED W/ ARCING HORNS
	COUPLING CAPACITOR VOLTAGE TRANSFORMER
	FUSED SWITCH
	STATION SERVICE VOLTAGE TRANSFORMER
M	REVENUE METERING

REFERENCE DRAWINGS:

S-010 – SWITCHYARD SUBSTATION GENERAL ARRANGEMENT PLAN
S-011 – SWITCHYARD SUBSTATION SECTIONS A-A, B-B
S-012 – SWITCHYARD SUBSTATION SECTIONS C-C, D-D, E-E
S-013 – SWITCHYARD SUBSTATION YARD LIGHTING PLAN
S-014 – SWITCHYARD SUBSTATION FENCE & GROUNDING PLAN
S-015 – SWITCHYARD SUBSTATION FENCE & GROUNDING DETAILS
S-016 – SWITCHYARD SUBSTATION CONTROL HOUSE ELECTRICAL LAYOUT PLAN

PRELIMINARY
NOT FOR CONSTRUCTION

TRC
249 Western Avenue
Augusta, ME 04330

PROJECT NO: 327851

REV	DESCRIPTION	DATE	DES	CHK	APP
A	ISSUED FOR CLIENT REVIEW	06/20/19	AAD	DG	AKD

AAD/TRC DESIGNED
AAD/TRC DRAWN
DG/TRC CHECKED
AKD/TRC APPROVED

PRELIMINARY
SWITCHYARD SUBSTATION POWER ONE-LINE DIAGRAM
EAST POINT ENERGY CENTER
EAST POINT ENERGY CENTER, LLC
SHARON SCHOHARIE CO., NY

REVIEW 1 — 06/20/19 DATE
REVIEW 2 — NONE SCALE

TRC

S-009

REV. A

ADJUST DIRECTION OF NORTH ARROW AS NEEDED

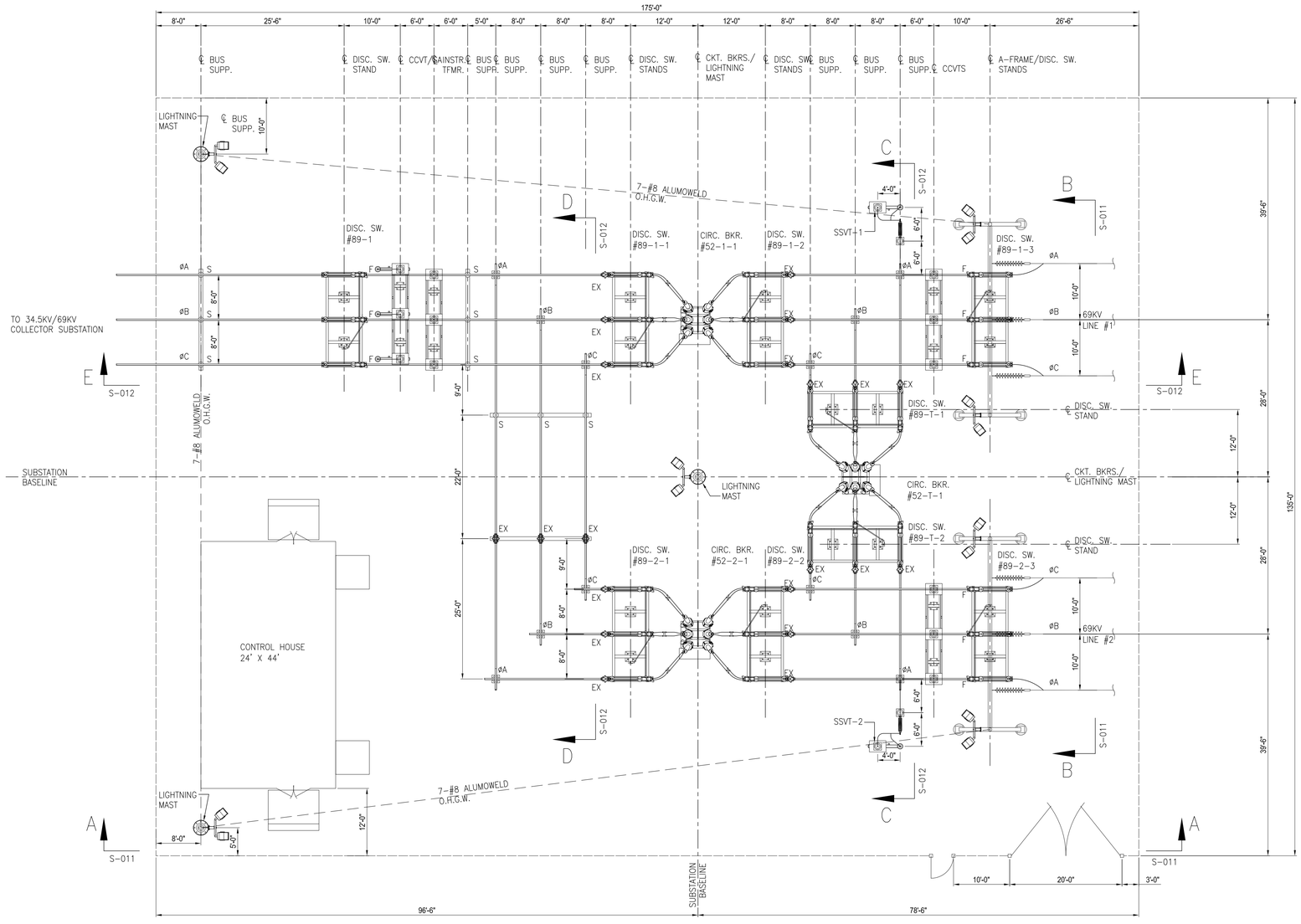

PLAN VIEW

NOTES:

1. BUS SUPPORTS PROVIDED AND INSTALLED AS SHOWN FOR THE FOLLOWING TYPES:
   F-FIXED BUS SUPPORT
   S-SLIP BUS SUPPORT
   EX-EXPANSION BUS SUPPORT
2. CLEARANCES FOR ALL BUS & CONDUCTOR TO BE PER VALUES PUBLISHED IN ANSI C37.32 TABLE 5:
   69KV-PHASE TO PHASE 7'-0" (CENTERLINE-CENTERLINE)
   -PHASE TO GROUND 2'-1" (METAL TO METAL)
3. WIRE CONDUCTOR MINIMUM BEND RADIUS TO BE INSTALLED NO LESS THAN:
   1272KCM-20 INCHES
   336KCM-10 INCHES
   4/0 COPPER-8 INCHES
   2/0 COPPER-6 INCHES
   1/0 AAAC-5.5 INCHES
   #2 COPPER-4 INCHES

REFERENCE DRAWINGS:

S-009 – SWITCHYARD SUBSTATION POWER ONE-LINE DIAGRAM
S-011 – SWITCHYARD SUBSTATION SECTIONS A-A, B-B
S-012 – SWITCHYARD SUBSTATION SECTIONS C-C, D-D, E-E
S-013 – SWITCHYARD SUBSTATION YARD LIGHTING PLAN
S-014 – SWITCHYARD SUBSTATION FENCE & GROUNDING PLAN
S-015 – SWITCHYARD SUBSTATION FENCE & GROUNDING DETAILS
S-016 – SWITCHYARD SUBSTATION CONTROL HOUSE ELECTRICAL LAYOUT PLAN

0 5 10 15 20 30
SCALE (FEET)
3/32" = 1'-0"

PRELIMINARY
NOT FOR CONSTRUCTION

TRC 249 Western Avenue Augusta, ME 04330

PROJECT NO: 327851

REFERENCES	REV	DESCRIPTION	DATE	DES	CHK	APP
	A	ISSUED FOR CLIENT REVIEW	06/20/19	AAD	DG	AKD

AAD/TRC DESIGNED
AAD/TRC DRAWN
DG/TRC CHECKED
AKD/TRC APPROVED
REVIEW 1
REVIEW 2
06/20/19 DATE
3/32"=1'-0" SCALE

PRELIMINARY
SWITCHYARD SUBSTATION GENERAL ARRANGEMENT PLAN
EAST POINT ENERGY CENTER
EAST POINT ENERGY CENTER, LLC
SHARON SCHOHARIE CO., NY

TRC

S-010

REV. A

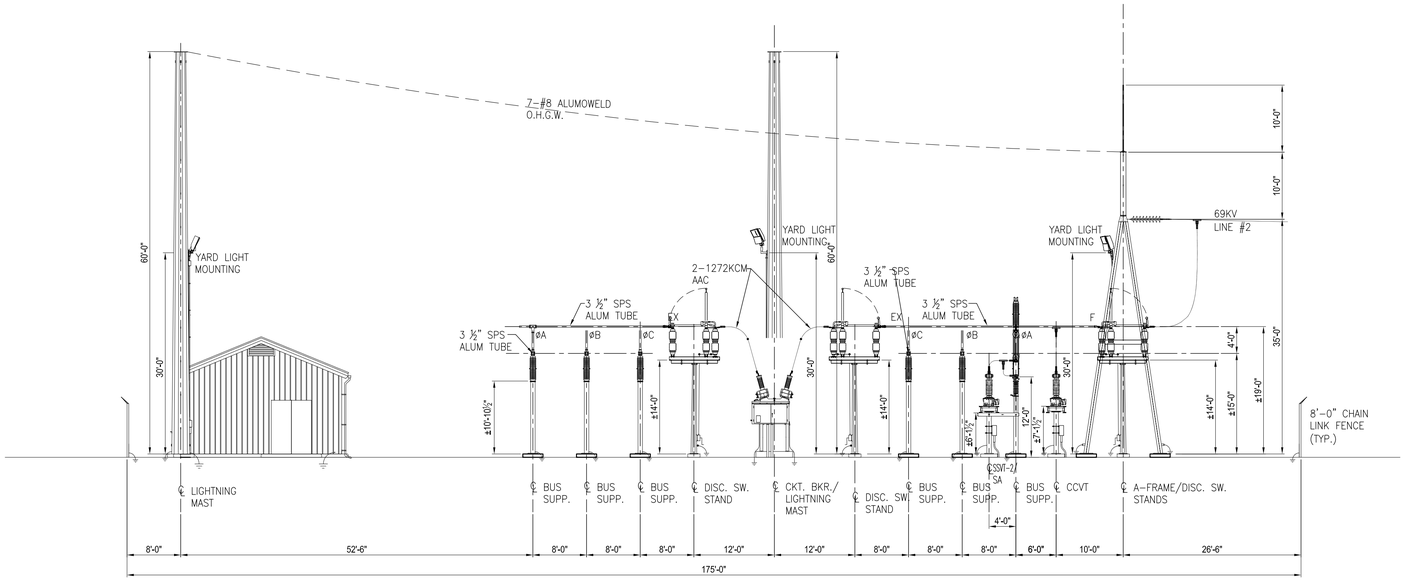

SECTION A-A

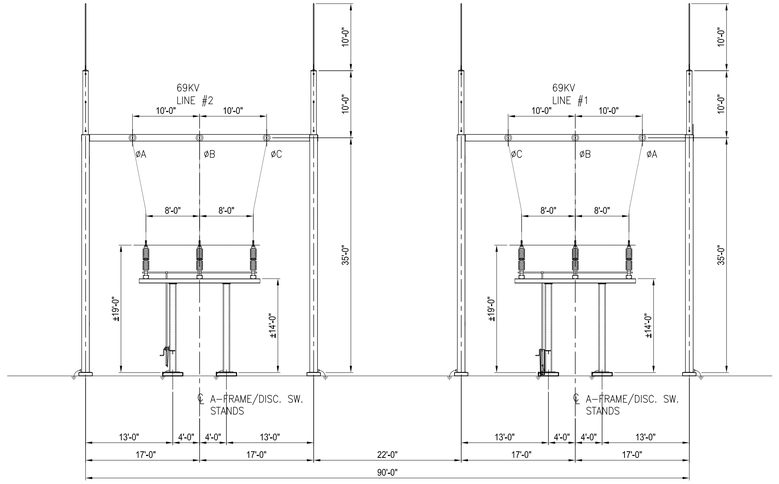

SECTION B-B

NOTES:

1. BUS SUPPORTS PROVIDED AND INSTALLED AS SHOWN FOR THE FOLLOWING TYPES:
   F-FIXED BUS SUPPORT
   S-SLIP BUS SUPPORT
   EX-EXPANSION BUS SUPPORT
2. CLEARANCES FOR ALL BUS & CONDUCTOR TO BE PER VALUES PUBLISHED IN ANSI C37.32 TABLE 5:
   69KV-PHASE TO PHASE 7'-0" (CENTERLINE-CENTERLINE)
   -PHASE TO GROUND 2'-1" (METAL TO METAL)
3. WIRE CONDUCTOR MINIMUM BEND RADIUS TO BE INSTALLED NO LESS THAN:
   1272KCM-20 INCHES
   336KCM-10 INCHES
   4/0 COPPER-8 INCHES
   2/0 COPPER-6 INCHES
   1/0 AAAC-5.5 INCHES
   #2 COPPER-4 INCHES

REFERENCE DRAWINGS:

S-009 - SWITCHYARD SUBSTATION POWER ONE-LINE DIAGRAM
S-010 - SWITCHYARD SUBSTATION GENERAL ARRANGEMENT PLAN
S-012 - SWITCHYARD SUBSTATION SECTIONS C-C, D-D, E-E
S-013 - SWITCHYARD SUBSTATION YARD LIGHTING PLAN
S-014 - SWITCHYARD SUBSTATION FENCE & GROUNDING PLAN
S-015 - SWITCHYARD SUBSTATION FENCE & GROUNDING DETAILS
S-016 - SWITCHYARD SUBSTATION CONTROL HOUSE ELECTRICAL LAYOUT PLAN

0 5 10 15 20 30
SCALE (FEET)
3/32" = 1'-0"

PRELIMINARY
NOT FOR CONSTRUCTION

TRC 249 Western Avenue
Augusta, ME 04330

PROJECT NO: 327851

REFERENCES	REV	DESCRIPTION	DATE	DES	CHK	APP
	A	ISSUED FOR CLIENT REVIEW	06/20/19	AAD	DG	AKD

AAD/TRC DESIGNED
AAD/TRC DRAWN
DG/TRC CHECKED
AKD/TRC APPROVED
REVIEW 1
REVIEW 2

PRELIMINARY
SWITCHYARD SUBSTATION SECTIONS A-A, B-B
EAST POINT ENERGY CENTER
EAST POINT ENERGY CENTER, LLC
SHARON SCHOHARIE CO., NY

06/20/19 DATE
3/32"=1'-0" SCALE

TRC

S-011

REV. A

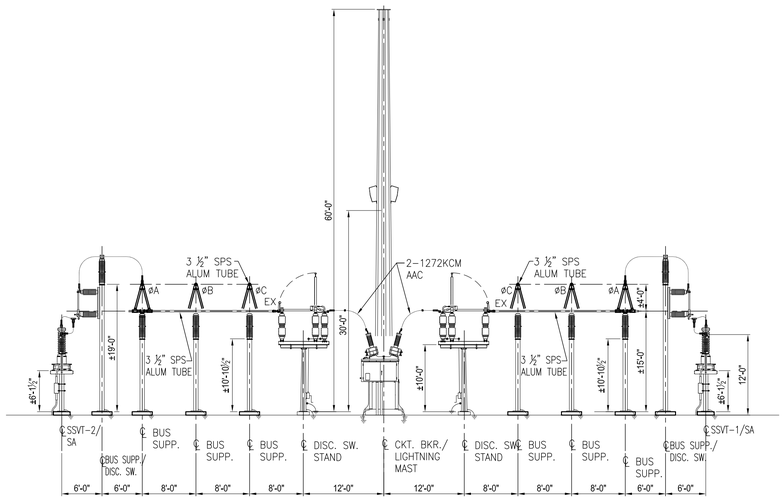

SECTION C-C

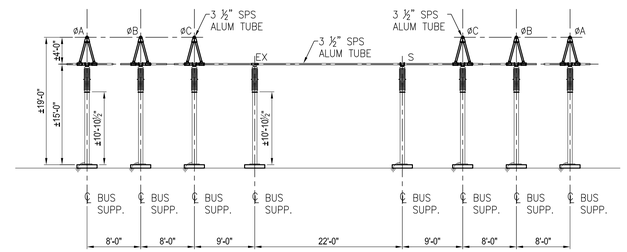

SECTION D-D

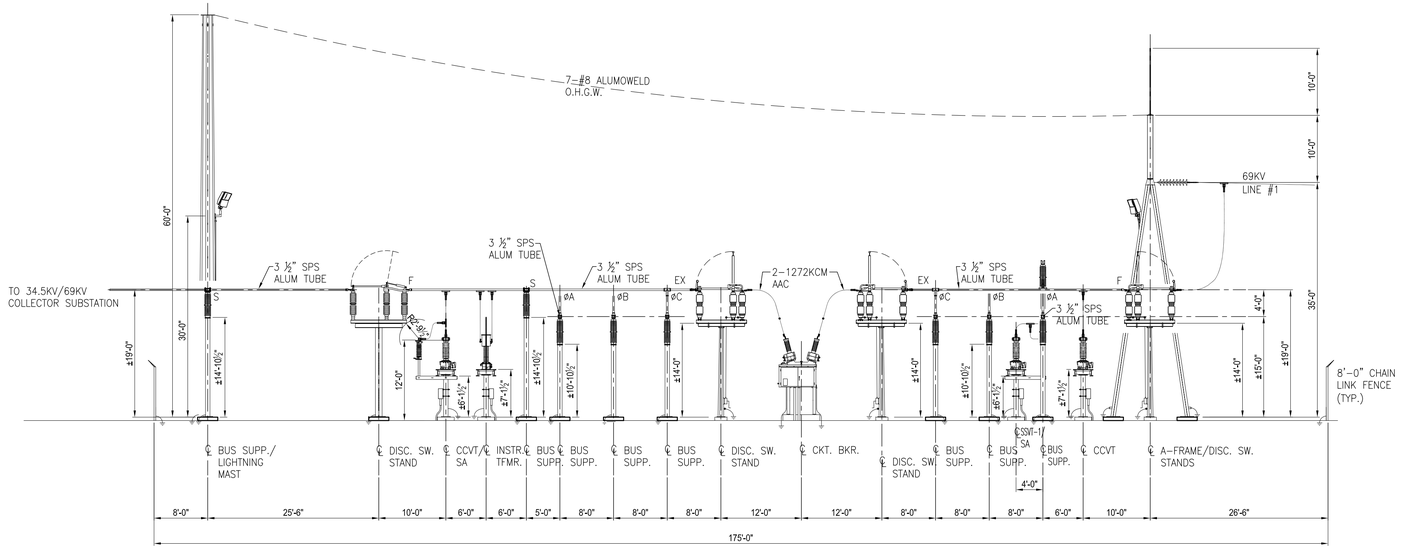

SECTION E-E

NOTES:

1. BUS SUPPORTS PROVIDED AND INSTALLED AS SHOWN FOR THE FOLLOWING TYPES:
   F-FIXED BUS SUPPORT
   S-SLIP BUS SUPPORT
   EX-EXPANSION BUS SUPPORT
2. CLEARANCES FOR ALL BUS & CONDUCTOR TO BE PER VALUES PUBLISHED IN ANSI C37.32 TABLE 5:
   69KV-PHASE TO PHASE 7'-0" (CENTERLINE-CENTERLINE)
   -PHASE TO GROUND 2'-1" (METAL TO METAL)
3. WIRE CONDUCTOR MINIMUM BEND RADIUS TO BE INSTALLED NO LESS THAN:
   1272KCM-20 INCHES
   336KCM-10 INCHES
   4/0 COPPER-8 INCHES
   2/0 COPPER-6 INCHES
   1/0 AAAC-5.5 INCHES
   #2 COPPER-4 INCHES

REFERENCE DRAWINGS:

S-009 - SWITCHYARD SUBSTATION POWER ONE-LINE DIAGRAM
S-010 - SWITCHYARD SUBSTATION GENERAL ARRANGEMENT PLAN
S-011 - SWITCHYARD SUBSTATION SECTIONS A-A, B-B
S-013 - SWITCHYARD SUBSTATION YARD LIGHTING PLAN
S-014 - SWITCHYARD SUBSTATION FENCE & GROUNDING PLAN
S-015 - SWITCHYARD SUBSTATION FENCE & GROUNDING DETAILS
S-016 - SWITCHYARD SUBSTATION CONTROL HOUSE ELECTRICAL LAYOUT PLAN

0 5 10 15 20 30
SCALE (FEET)
3/32" = 1'-0"

PRELIMINARY
NOT FOR CONSTRUCTION

TRC 249 Western Avenue Augusta, ME 04330

PROJECT NO: 327851

REFERENCES	REV	DESCRIPTION	DATE	DES	CHK	APP
	A	ISSUED FOR CLIENT REVIEW	06/20/19	AAD	DG	AKD

AAD/TRC DESIGNED
AAD/TRC DRAWN
DG/TRC CHECKED
AKD/TRC APPROVED
REVIEW 1
REVIEW 2
06/20/19 DATE
3/32"=1'-0" SCALE

PRELIMINARY
SWITCHYARD SUBSTATION SECTIONS C-C, D-D, E-E
EAST POINT ENERGY CENTER
EAST POINT ENERGY CENTER, LLC
SHARON SCHOHARIE CO., NY

TRC

S-012

REV. A

ADJUST DIRECTION OF NORTH ARROW AS NEEDED

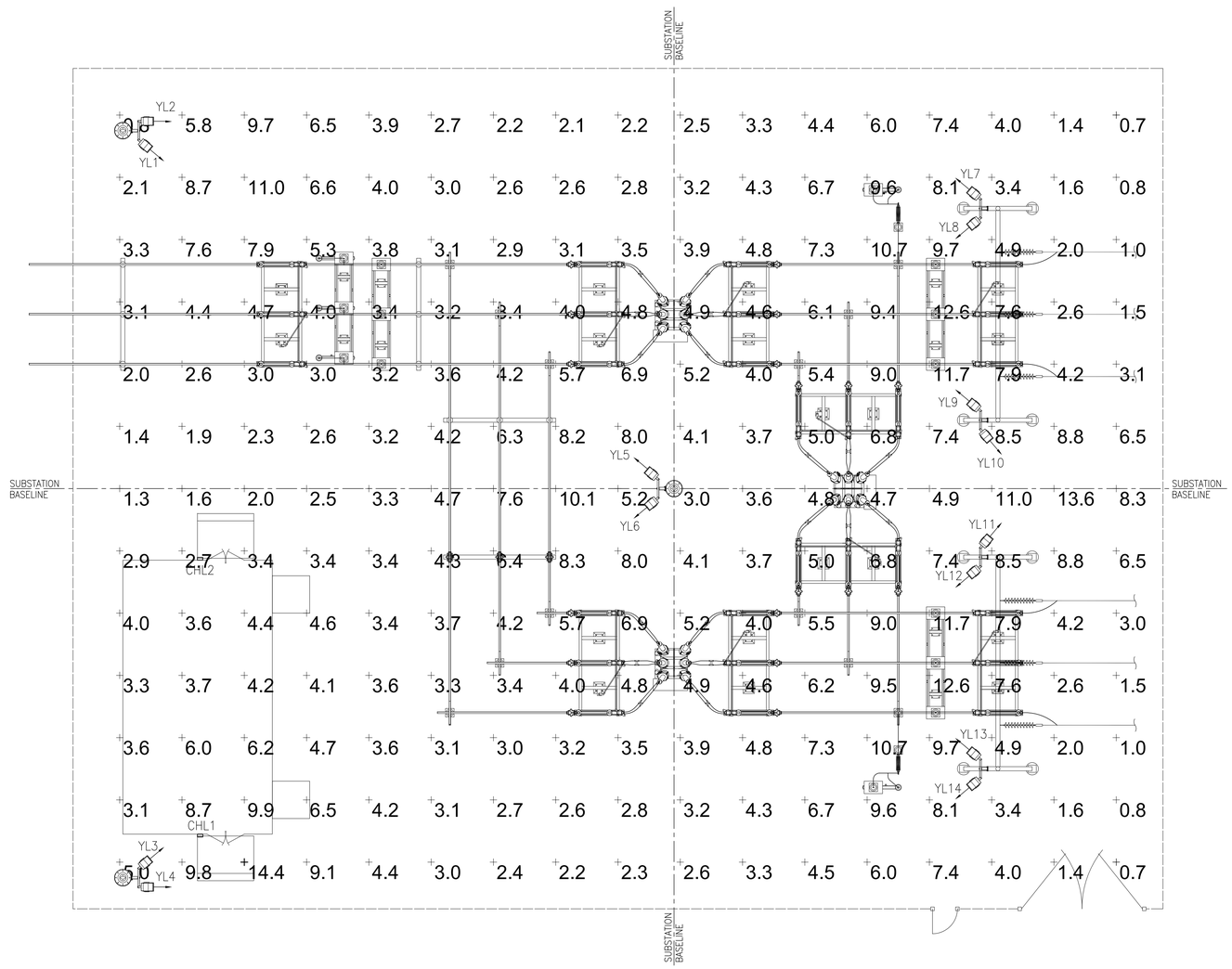

PLAN VIEW

YARD LIGHTING SCHEDULE						
LIGHT NO.	TYPE	WATTAGE	MOUNTING HEIGHT	ORIENTATION	TILT (DEGREES)	PANEL/ CCT. #
YL1	TFLU 250S	250W	30FT	130	60	---
YL2	TFLU 250S	250W	30FT	90	60	---
YL3	TFLU 250S	250W	30FT	60	60	---
YL4	TFLU 250S	250W	30FT	90	60	---
YL5	TFLU 250S	250W	30FT	310	60	---
YL6	TFLU 250S	250W	30FT	230	60	---
YL7	TFLU 250S	250W	30FT	310	60	---
YL8	TFLU 250S	250W	30FT	230	60	---
YL9	TFLU 250S	250W	30FT	310	60	---
YL10	TFLU 250S	250W	30FT	140	60	---
YL11	TFLU 250S	250W	30FT	40	60	---
YL12	TFLU 250S	250W	30FT	230	60	---
YL13	TFLU 250S	250W	30FT	310	60	---
YL14	TFLU 250S	250W	30FT	230	60	---
CHL1	TWA 70S	70W	10FT	---	---	---
CHL2	TWA 70S	70W	10FT	---	---	---

STATISTICS – OVERALL SITE						
DESCRIPTION	SYMBOL	AVERAGE	MAXIMUM	MINIMUM	MAX/MIN	AVERAGE/MIN
SITE	+	5.0 fc	14.4 fc	0.7 fc	20.6:1	7.1:1

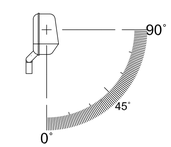

YARD LIGHT TILT

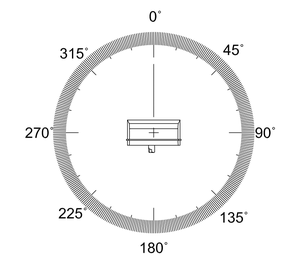

YARD LIGHT ORIENTATION ANGLE

LEGEND

"A" LIGHT FIXTURE, LITHONIA CONTOUR TFLU-250S (WOOD POLE MOUNTED)

"C" LIGHT FIXTURE, LITHONIA CONTOUR TWA-70S (BUILDING MOUNTED)

NOTES:

1. ALL YARD FLOOD FIXTURES ARE MOUNTED 30'-0" ABOVE FINISHED GRADE.
2. EXTERIOR CONTROL HOUSE FIXTURES ARE MOUNTED 10'-0" ABOVE FINISHED GRADE.
3. INCIDENT LIGHT LEVEL POINTS ARE SPACED AT 10' X 10'.
4. THE AVERAGE ILLUMINATION IN THE SUBSTATION YARD IS 5.0 FOOTCANDLES.
5. YARD LIGHTING CONTROL EQUIPMENT IS DEFINED ON DWG. 327851-XX.
6. LIGHTING CALCULATIONS WERE PERFORMED USING VISUAL 2016, VERSION 2.08.
7. OVERALL SITE LAYOUT INCLUDES PROPOSED PERIMETER AND PROPOSED WORK LIGHTING.
8. PERIMETER LIGHTING CONTROL OPTIONS ARE ON/OFF/AUTO.
9. WORK LIGHTING CONTROL OPTIONS ARE ON/OFF.

REFERENCE DRAWINGS:

S-009 – SWITCHYARD SUBSTATION POWER ONE-LINE DIAGRAM
S-010 – SWITCHYARD SUBSTATION GENERAL ARRANGEMENT PLAN
S-011 – SWITCHYARD SUBSTATION SECTIONS A-A, B-B
S-012 – SWITCHYARD SUBSTATION SECTIONS C-C, D-D, E-E
S-014 – SWITCHYARD SUBSTATION FENCE & GROUNDING PLAN
S-015 – SWITCHYARD SUBSTATION FENCE & GROUNDING DETAILS
S-016 – SWITCHYARD SUBSTATION CONTROL HOUSE ELECTRICAL LAYOUT PLAN

0 5 10 15 20 30
SCALE (FEET)
3/32" = 1'-0"

PRELIMINARY
NOT FOR CONSTRUCTION

TRC 249 Western Avenue Augusta, ME 04330

PROJECT NO: 327851

REFERENCES	REV	DESCRIPTION	DATE	DES	CHK	APP
	A	ISSUED FOR CLIENT REVIEW	06/20/19	AAD	DG	AKD

AAD/TRC DESIGNED
AAD/TRC DRAWN
DG/TRC CHECKED
AKD/TRC APPROVED
REVIEW 1
REVIEW 2
06/20/19 DATE
3/32"=1'-0" SCALE

PRELIMINARY
SWITCHYARD SUBSTATION YARD LIGHTING PLAN
EAST POINT ENERGY CENTER
EAST POINT ENERGY CENTER, LLC
SHARON SCHOHARIE CO., NY

TRC

S-013

REV. A

ADJUST DIRECTION OF NORTH ARROW AS NEEDED

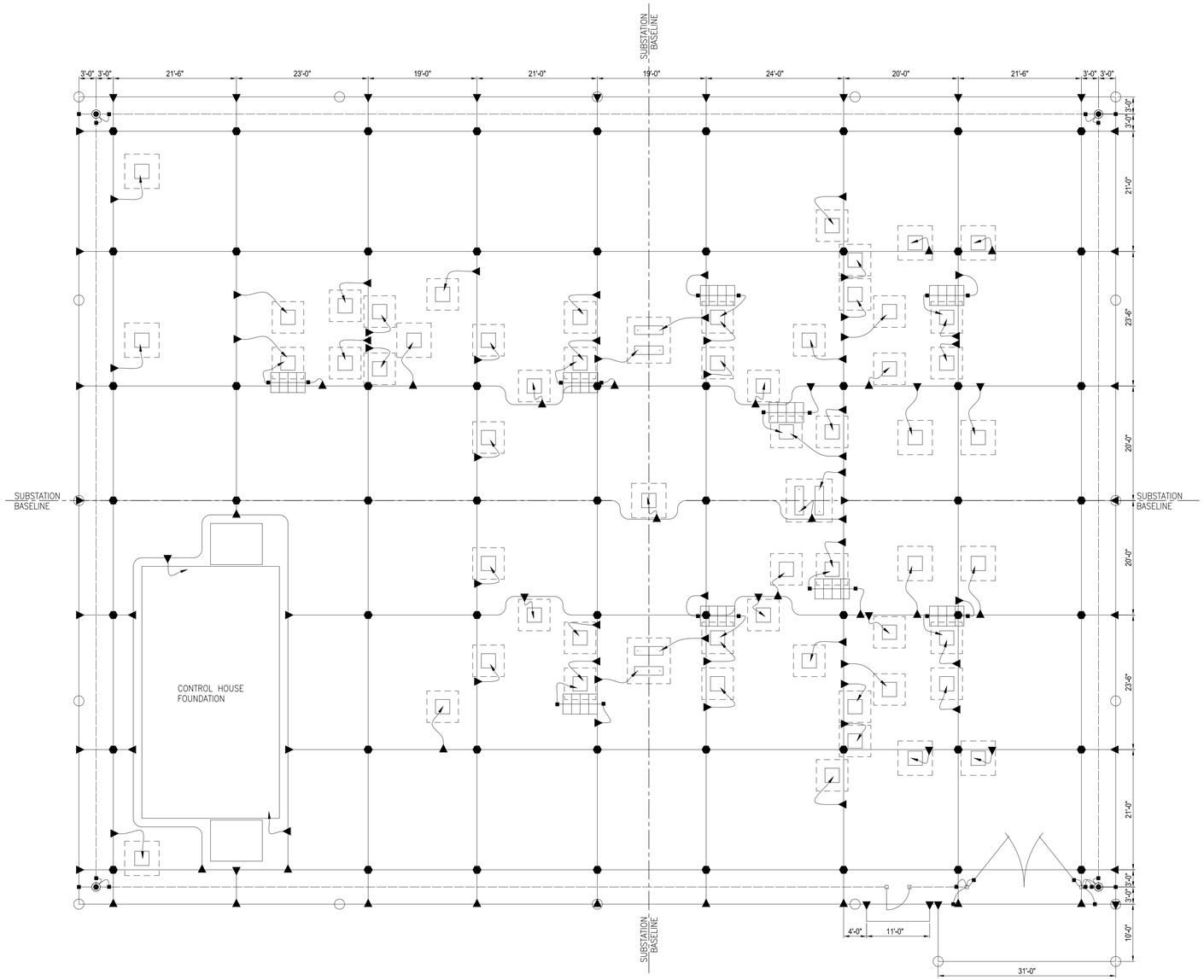

PLAN VIEW

LEGEND OF SYMBOLS:

SYMBOL	DESCRIPTION	MATERIAL MARK
	8' PERIMETER FENCE	G01
	GROUND CLAMP, GALV. PIPE TO CABLE (FOR LINE POST)	G04
	GROUND CLAMP, GALV. PIPE TO CABLE (FOR GATE POST)	G05
	GROUND CLAMP, GALV. PIPE TO CABLE (FOR INTERMEDIATE POST)	G06
	SPLIT BOLT CONNECTOR	G07
	2/0 COPPER GROUND STRAND SOFT DRAWN	G08
	4/0 COPPER GROUND WIRE 19 STRAND SOFT DRAWN	G09
	4/0 COPPER WIRE PIGTAIL	G09
	GROUND CLAMP, GALV. PIPE TO CABLE	G10
	GROUND CLAMP, GALV. PIPE TO CABLE (FOR GATE FRAME)	G11
	CONNECTOR, GROUND, #2/0 TO GALV. PIPE	G12
	4/0 TO 4/0 COPPER WIRE CROSS CONNECTION	G13
	4/0 TO 4/0 COPPER WIRE TEE CONNECTION	G13
	4/0 TO 1/0 COPPER WIRE TEE CONNECTION	G15
	BRAID, 1⅝" X 18", TINNED COPPER, FERRULE ENDS,	G16
	4' X 6' COPPER WIRE SWITCH MAT	G17
	GROUND ROD LOCATION	G20
	FENCE POST	TBD

NOTES:

1. PERIMITER GROUND CONDUCTOR TO BE A CONTINUOUS LOOP.
2. THE GROUND GRID SHALL BE 4/0 COPPERWELD AND BURIED AT A MINIMUM DEPTH OF 2'-0" BELOW GRADE.
3. TAPS FROM MAIN GRID SHALL BE AT LOCATIONS INDICATED TO GROUND STRUCTURE COLUMNS, EQUIPMENT, ETC.
4. PROVIDE TAPS FOR FENCE GROUND AT EACH GATE POST, CORNER POST AND FOR EVERY THIRD OR FOURTH LINE POST.
5. ALL TAPS SHALL EXTEND AT LEAST 6'-0" ABOVE FINISHED GRADE (AFG), UNLESS OTHERWISE NOTED.

REFERENCE DRAWINGS:

S-009 – SWITCHYARD SUBSTATION POWER ONE-LINE DIAGRAM
S-010 – SWITCHYARD SUBSTATION GENERAL ARRANGEMENT PLAN
S-011 – SWITCHYARD SUBSTATION SECTIONS A-A, B-B
S-012 – SWITCHYARD SUBSTATION SECTIONS C-C, D-D, E-E
S-013 – SWITCHYARD SUBSTATION YARD LIGHTING PLAN
S-015 – SWITCHYARD SUBSTATION FENCE & GROUNDING DETAILS
S-016 – SWITCHYARD SUBSTATION CONTROL HOUSE ELECTRICAL LAYOUT PLAN

0 5 10 15 20 30
SCALE (FEET)
3/32" = 1'-0"

PRELIMINARY
NOT FOR CONSTRUCTION

TRC
249 Western Avenue
Augusta, ME 04330

PROJECT NO: 327851

REFERENCES	REV	DESCRIPTION	DATE	DES	CHK	APP
	A	ISSUED FOR CLIENT REVIEW	06/20/19	AAD	DG	AKD

AAD/TRC DESIGNED
AAD/TRC DRAWN
DG/TRC CHECKED
AKD/TRC APPROVED
REVIEW 1
REVIEW 2

PRELIMINARY
SWITCHYARD SUBSTATION FENCE & GROUNDING PLAN
EAST POINT ENERGY CENTER
EAST POINT ENERGY CENTER, LLC
SHARON SCHOHARIE CO., NY

06/20/19 DATE
3/32"=1'-0" SCALE

TRC

S-014

REV. A

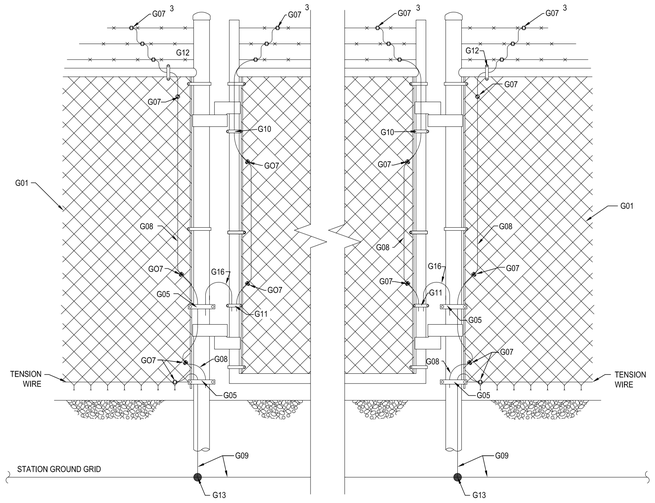

PER GATE QUANTITIES

G05 Qty 4	G10 Qty 2
G07 Qty 24	G11 Qty 2
G08 Qty 32'	G12 Qty 2
G09 Qty 20'	G13 Qty 2
	G16 Qty 4'

DETAIL "A"

24'-0" MAIN GATE GROUNDING

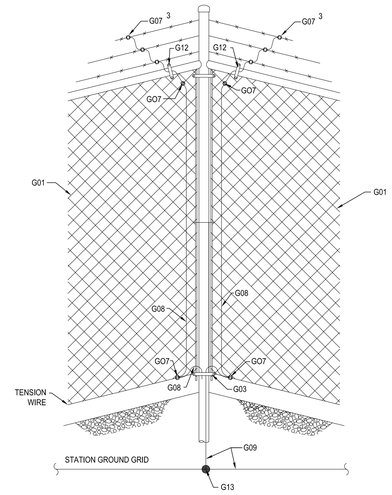

PER CORNER POST QUANTITIES

G03 Qty 1	G09 Qty 10'
G07 Qty 10	G12 Qty 2
G08 Qty 20'	G13 Qty 1

DETAIL "B"

CORNER POST GROUNDING

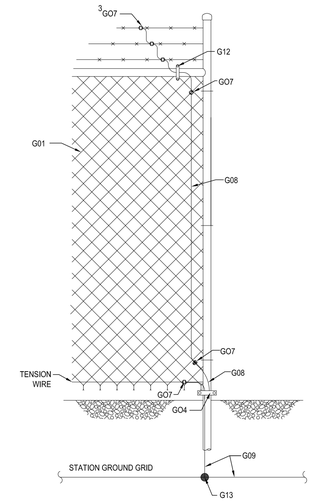

PER END POST QUANTITIES

G04 Qty 1	G09 Qty 10'
G07 Qty 6	G12 Qty 1
G08 Qty 8'	G13 Qty 1

DETAIL "C"

END POST GROUNDING

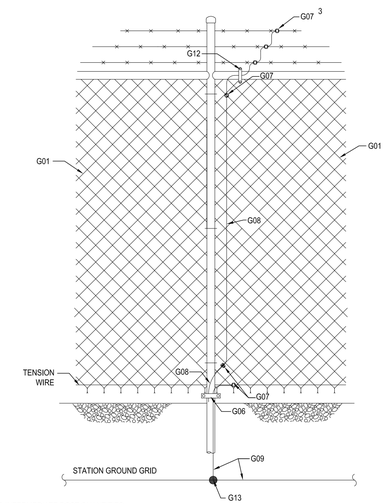

PER INTERMEDIATE POST QUANTITIES

G06 Qty 1	G12 Qty 1
G07 Qty 6	G13 Qty 1
	G08 Qty 8'
	G09 Qty 10'

DETAIL "D"

INTERMEDIATE POST GROUNDING

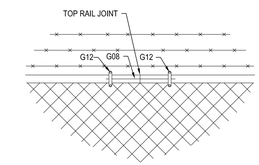

DETAIL "E"

TOP RAIL JOINT GROUNDING

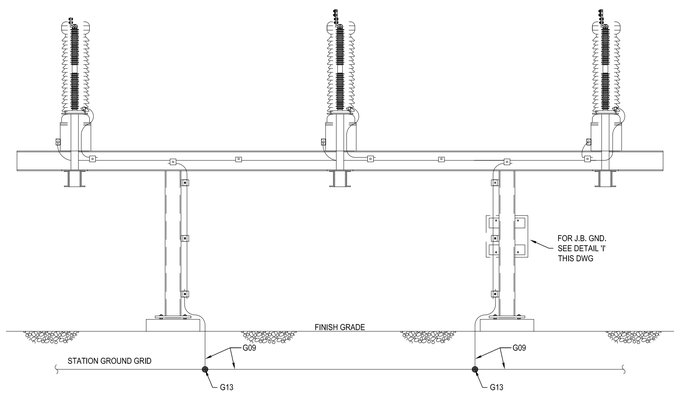

DETAIL "H"

TYPICAL 69KV CCVT/LA GROUNDING

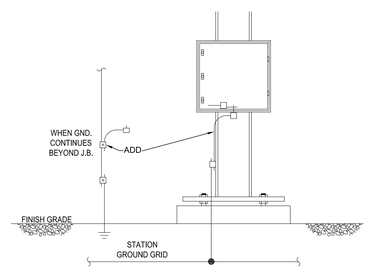

DETAIL "I"

TYPICAL JUNCTION BOX GROUNDING

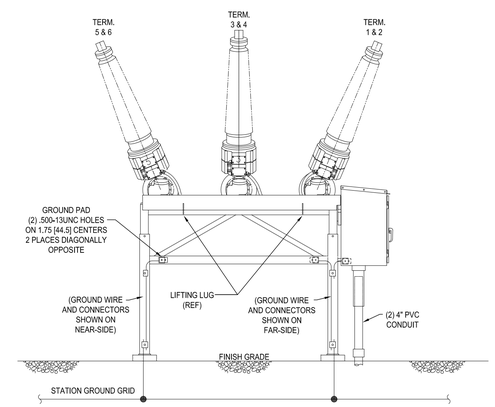

DETAIL "J"

TYPICAL BREAKER & MECH. HOUSING GROUNDING

REFERENCE DRAWINGS:

S-009 – SWITCHYARD SUBSTATION POWER ONE-LINE DIAGRAM
S-010 – SWITCHYARD SUBSTATION GENERAL ARRANGEMENT PLAN
S-011 – SWITCHYARD SUBSTATION SECTIONS A-A, B-B
S-012 – SWITCHYARD SUBSTATION SECTIONS C-C, D-D, E-E
S-013 – SWITCHYARD SUBSTATION YARD LIGHTING PLAN
S-014 – SWITCHYARD SUBSTATION FENCE & GROUNDING PLAN
S-016 – SWITCHYARD SUBSTATION CONTROL HOUSE ELECTRICAL LAYOUT PLAN

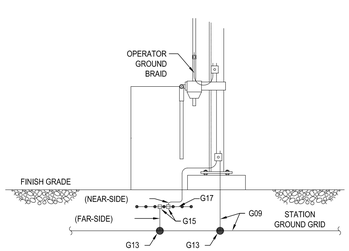

DETAIL "F"

TYPICAL GROUND DETAIL AT WORM GEAR SW. OPER. MECH.

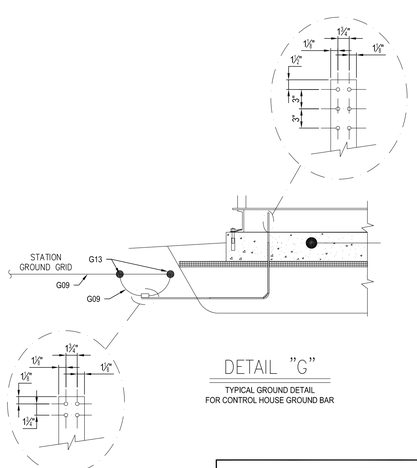

DETAIL "G"

TYPICAL GROUND DETAIL FOR CONTROL HOUSE GROUND BAR

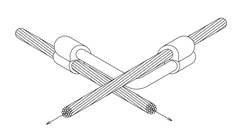

4/0 CABLE TO 4/0 CABLE CROSS OR TEE

BURNDY CAT.#YGL29C29 MARK"G13"
CONDUCTOR RANGE:
COND. "A" - #2 SOL.-250KCM
COND. "B" - #2 STR.-250KCM
COMPRESSION TOOLS:
Y750/Y35/Y39 HYPRESS
Y45 HYPRESS W/ PT6515 ADAPTER
Y46 HYPRESS W/ P-UADP ADAPTER
DIE SET CAT.# U997
ONE (1) CRIMP REQUIRED

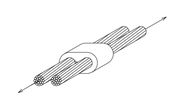

4/0 CABLE TO 1/0 CENTER WIRE GROUND MAT

BURNDY CAT.#YGHC29C29 MARK"G23"
CONDUCTOR RANGE:
RUN - #3/0 STR.-250KCM
TAP - #3/0 STR.-250KCM
COMPRESSION TOOLS:
Y750/Y35/Y39 HYPRESS
DIE SET CAT.# U997
ONE (1) CRIMP REQUIRED

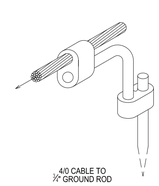

4/0 CABLE TO ½" GROUND ROD

BURNDY CAT.#YGL34C29 MARK"G14"
CONDUCTOR RANGE:
ROD -½"-½"
CABLE - #2 STR.-250KCM
COMPRESSION TOOLS:
Y750/Y45/Y46 HYPRESS
Y750 COND."A" DIE SET CAT.# PU998
Y750 COND."B" DIE SET CAT.# U997
Y45 COND. "A" DIE SET CAT.# S998 OR PU998
Y45 COND. "B" DIE SET CAT.# U997
Y46 COND. "A" DIE SET CAT.# P998 OR PU998
Y46 COND. "B" DIE SET CAT.# U997
ONE (1) CRIMP REQUIRED
TWO (2) CRIMP ON GND ROD
PRECRIMP GND ROD USE CAT.#U2CABT

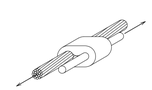

4/0 CABLE TO 1/0 CENTER WIRE GROUND MAT

BURNDY CAT.#YGHC29C26 MARK"G15"
CONDUCTOR RANGE:
RUN - #3/0 STR.-250KCM
TAP - #6 SOL.-2/0 STR.
COMPRESSION TOOLS:
Y750/Y35/Y39 HYPRESS
DIE SET CAT.# U997
ONE (1) CRIMP REQUIRED

PRELIMINARY
NOT FOR CONSTRUCTION

TRC 249 Western Avenue Augusta, ME 04330

PROJECT NO: 327851

REFERENCES	REV	DESCRIPTION	DATE	DES	CHK	APP
	A	ISSUED FOR CLIENT REVIEW	06/20/19	AAD	DG	AKD

AAD/TRC DESIGNED	PRELIMINARY
AAD/TRC DRAWN	SWITCHYARD SUBSTATION FENCE & GROUNDING DETAILS
DG/TRC CHECKED	EAST POINT ENERGY CENTER
AKD/TRC APPROVED	EAST POINT ENERGY CENTER, LLC
	SHARON SCHOHARIE CO., NY
REVIEW 1	06/20/19 DATE
REVIEW 2	NONE SCALE
	TRC
	S-015
	REV. A

ADJUST DIRECTION OF NORTH ARROW AS NEEDED

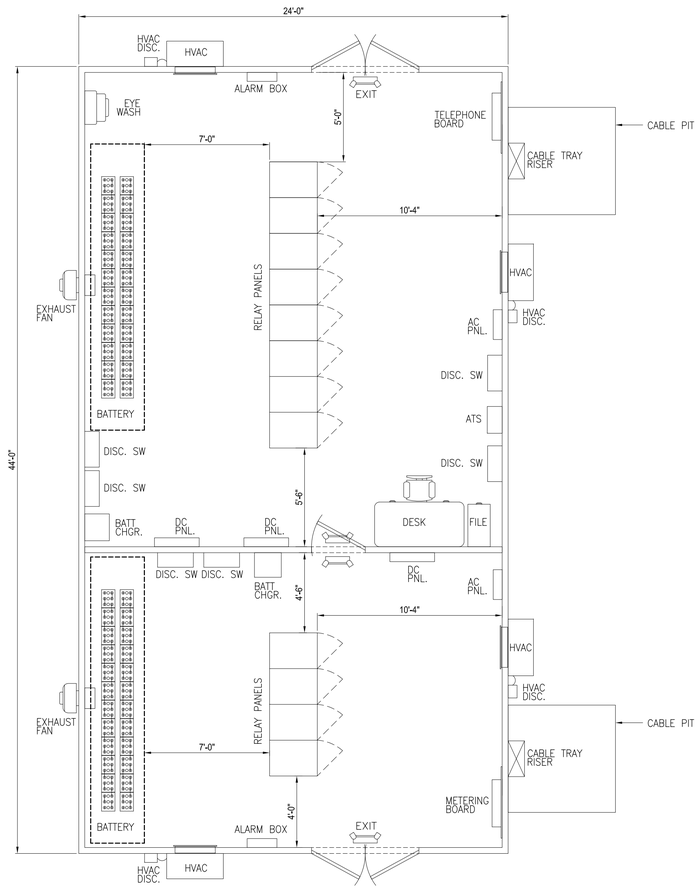

CONTROL ROOM FLOOR PLAN

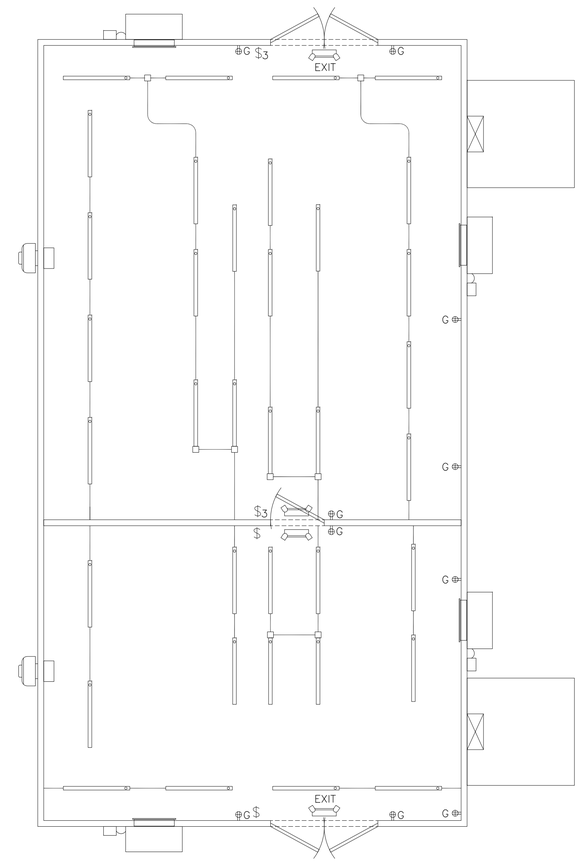

CONTROL ROOM LIGHTING PLAN

REFERENCE DRAWINGS:

S-009 – SWITCHYARD SUBSTATION POWER ONE-LINE DIAGRAM
S-010 – SWITCHYARD SUBSTATION GENERAL ARRANGEMENT PLAN
S-011 – SWITCHYARD SUBSTATION SECTIONS A-A, B-B
S-012 – SWITCHYARD SUBSTATION SECTIONS C-C, D-D, E-E
S-013 – SWITCHYARD SUBSTATION YARD LIGHTING PLAN
S-014 – SWITCHYARD SUBSTATION FENCE & GROUNDING PLAN
S-015 – SWITCHYARD SUBSTATION FENCE & GROUNDING DETAILS

LEGEND:

$ –SINGLE TOGGLE SWITCH
$3 –3 WAY TOGGLE SWITCH
T –HVAC THERMOSTAT
–WIRING HOME RUN, SINGLE POLE
–WIRING HOME RUN, DOUBLE POLE
G –DOUBLE DUPLEX OUTLET, 20A

LIGHTING SCHEDULE:

–FLOURESCENT LIGHT FIXTURE, 2 LAMP 4', 32 WATT, 120V
–OUTDOOR LIGHT FIXTURE, HIGH PRESSURE SODIUM, 70 WATT, 120V
EXIT –EMERGENCY BATTERY LIGHT/EXIT SIGN, 120V

PRELIMINARY
NOT FOR CONSTRUCTION

TRC
249 Western Avenue
Augusta, ME 04330

PROJECT NO: 327851

REFERENCES	REV	DESCRIPTION	DATE	DES	CHK	APP
	A	ISSUED FOR CLIENT REVIEW	06/20/19	AAD	DG	AKD

AAD/TRC DESIGNED
AAD/TRC DRAWN
DG/TRC CHECKED
AKD/TRC APPROVED
REVIEW 1
REVIEW 2

PRELIMINARY
SWITCHYARD SUBSTATION CONTROL HOUSE ELECTRICAL LAYOUT PLAN
EAST POINT ENERGY CENTER
EAST POINT ENERGY CENTER, LLC
SHARON SCHOHARIE CO., NY

06/20/19 DATE
1/4"=1'-0" SCALE

TRC

S-016

REV. A